Buffet Server • Magazine Rack • Holiday Centerpiece • Desk Set • Installing Soss Hinges

Woodsmith®

Vol. 19 / No. 114

WhereWeShare.com

AN ELEGANT HEIRLOOM

Buffet Server

Woodsmith

No. 114 December, 1997

Publisher Donald B. Peschke
Editor Terry J. Strohman
Associate Editors Jon Garbison, Vincent Ancona
Art Director Todd Lambirth
Senior Illustrators David Kreyling, Dirk Ver Steeg, Mike Mittermeier

CREATIVE RESOURCES

Creative Director: Ted Kralicek • *Project Developer:* Ken Munkel • *Sr. Project Designer:* Kent Welsh • *Project Designers:* Ted Wong Jr., Kevin C. Boyle • *Shop Manager:* Steve Curtis • *Shop Craftsman:* Steve Johnson • *Photography Dir.:* Lark Smothermon • *Senior Photographer:* Crayola England

BOOKS

Executive Editor: Douglas L. Hicks • *Art Director:* Linda Vermie • *Senior Graphic Designer:* Chris Glowacki

CIRCULATION

Subscriber Services Director: Sandy Baum • *New Business Director:* Glenda K. Battles • *New Business Manager:* Todd Bierle • *Renewal Manager:* Paige Rogers • *Billing Mgr.:* Rebecca Cunningham • *Assistant Subscription Mgr.:* Joy Krause • *Promotion Assistant:* Rick Junkins • *Associate Graphic Design Director:* Susie Rider • *Sr. Graphic Designer:* Cheryl L. Simpson

CORPORATE SERVICES

Vice President of Planning and Finance: Jon Macarthy • *Controller:* Robin Hutchinson • *Sr. Account.:* Laura Thomas • *Accts. Payable:* Mary J. Schultz • *Production Dir.:* George Chmielarz • *Production Assistant:* Susan Dickman • *Electronic Pub:* Douglas M. Lidster • *Production Artist:* Jon Snyder • *Prepress Image Spec.:* Troy A. Clark • *New Media Manager:* Gordon C. Gaippe • *Web Site Art Director:* Gene Pedersen • *Network Administator:* Al Barnes • *I.S. Support Assistant:* Chris Harrison • *H. R. Director:* Joyce Moore • *H.R. Assistant:* Kirsten Koele • *Admin. Assistant:* Julia Fish • *Receptionists:* Jeanne Johnson, Sheryl Ribbey • *Special Projects Dir.:* Saville H. Inman • *Building Maint.:* Ken Griffith

WOODSMITH MAIL ORDER

Operations Director: Bob Baker • *Materials Mgr:* Mark Mattiussi • *Customer Service Mgr.:* Jennie Enos • *Warehouse Supr.:* Nancy Johnson • *Buyer:* Linda Jones • *Technical Service Rep.:* Matt TeRonde • *Oper. Assist.:* Tammy Aldini • *Team Leader:* Karla Eslinger • *Cust. Serv. Reps.:* Anna Cox, Margo Petrus, Tammy Truckenbrod, Nancy Downey, Adam Best, Deborah Rich • *Warehouse:* Sylvia Carey • *Quality Control Tech.:* Frank Johnson

WOODSMITH STORE

Manager: Dave Larson • *Assistant Manager:* Paul Schneider • *Sales Staff:* Pat Lowry, Jerome Herr, Wendell Stone, Jim Barnett, Kathy Smith, John Johnson • *Office Manager:* Vicki Edwards

Woodsmith® (ISSN 0164-4114) is published bimonthly (Feb., Apr., June, Aug., Oct., Dec.) by August Home Publishing Company, 2200 Grand, Des Moines, IA 50312.

Woodsmith® is a registered trademark of August Home Publishing. **Copyright©** 1997 August Home Publishing Company. All rights reserved.

Subscriptions: Single copy: $4.99. One year subscription (6 issues), $24.95. (Canada/Foreign add $5 per year, U.S. funds.)
Periodicals Postage Paid at Des Moines, IA and at additional offices.
Postmaster: Send change of address to *Woodsmith*, Box 37112, Boone, IA 50037-2112.
Subscription Questions? Write to *Woodsmith*, P.O. Box 842, Des Moines IA 50304-9961 or call 1-800-333-5075, 8:00 am to 5:00 pm, Central Time, weekdays.
E-Mail: woodsmith@woodsmith.com
World Wide Web: http://www.woodsmith.com

Printed in U.S.A.

EDITOR'S COLUMN

SAWDUST

One of the things I look forward to every holiday season are the simple traditions. Decorating a tree. Listening to Christmas carols.

HOLIDAY CENTERPIECE. This year, I decided to turn these traditions into a woodworking project — a tree that can be used as a holiday centerpiece.

The "branches" of the tree are cut with a scroll saw. And they're decorated with small wood ornaments.

Plus, we've included plans for an optional base that holds a music box movement inside. This movement rotates the tree as it plays the tune of "White Christmas."

GIFT PROJECTS. Another of my holiday traditions is making gifts to share with family and friends. The Christmas tree would make a great gift. But so will two of the other projects in this issue: a magazine rack and a desk set. Both are attractive projects that can be built quickly.

BUFFET SERVER. There's one final project in this issue — an heirloom buffet server. However, it's such a nice project that you're probably not going to want to give it away. But it *is* related to my favorite holiday tradition — the family dinner. And with this server, you'll have plenty of room for even more of your favorite holiday dishes.

HELP WANTED. We're looking for an associate editor to join our staff here at August Home Publishing. The ideal candidate will have both writing and woodworking experience.

If you're interested in this position, send a resume and letter highlighting your experience to J. S. Moore, 2200 Grand Ave., Des Moines, IA 50312.

Terry

STATEMENT OF OWNERSHIP, MANAGEMENT AND CIRCULATION
(Required by 39 U.S.C. 3685)

Publication Title: Woodsmith. 2. Publication No.: 0164—4114. 3. Filing Date: September 10, 1997. 4. Issue Frequency: Bimonthly. 5. No. of issues published annually: 6 (six). 6. Annual subscription price: $24.95. 7. Complete mailing address of known office of publication: 2200 Grand Avenue, Des Moines, (Polk County), Iowa 50312-5306. 8. Complete mailing address of the headquarters or general business office of the publisher: 2200 Grand Avenue, Des Moines, Iowa 50312-5306. 9. Full names and complete mailing address of publisher, editor, and managing editor: Publisher: Donald B. Peschke, 2200 Grand Avenue, Des Moines, Iowa 50312; Editor: Terry J. Strohman, 2200 Grand Avenue, Des Moines, Iowa 50312. 10. Owner: August Home Publishing Co., 2200 Grand Avenue, Des Moines, Iowa 50312; Donald B. Peschke, 2200 Grand Avenue, Des Moines, Iowa 50312. 11. Known bondholders, mortgagees, and other security holders owning 1 percent or more of total amount of bonds, mortgages or other securities: None. 12. (Does not apply.) 13. Publication Name: Woodsmith. 14. Issue Date for Circulation Data below: August/September 1997. 15. Extent and nature of circulation:

	Average no. copies each issue during preceding 12 months	Actual no. copies of single issue published nearest to filing date
A. Total no. copies printed (net press run)	359,026	338,091
B. Paid and/or requested circulation:		
1. Sales through dealers, street vendors and counter sales	17,195	16,637
2. Mail subscriptions (paid and/or requested)	304,811	285,004
C. Total paid and/or requested circulation	322,006	301,641
D. Free distribution by mail (samples, complimentary, and other free copies)	130	213
E. Free distribution outside the mail (carriers or other means)	0	0
F. Total free distribution	130	213
G. Total distribution	322,136	301,854
H. Copies not distributed		
1. Office use, left over, unaccounted, spoiled after printing	4,716	5,339
2. Returns from news agents	32,174	30,898
I. Total	359,026	338,091
Percentage paid and/or requested circulation	99.96%	99.93%

16. This statement of ownership will be printed in the December 1997 issue of this publication.
17. I certify that the statements made by me above are correct and complete. (signed) Terry J. Strohman, Editor

A LOOK INSIDE

CONTENTS

Features

Buffet Server 6

This buffet is an attractive addition to any dining room, but it is very practical as well. Besides all its storage space, the top of the buffet folds out to create a large surface for serving.

Soss Hinges 16

You can't see any hinges on the top of the buffet server — until the wings have been folded out. That's because we used some special hardware, called Soss hinges. In this article, we show you how to accurately install these hidden hinges step-by-step.

Magazine Rack 18

This magazine rack doesn't require much time to build — we used ordinary mortise and tenon joints to hold it together. And you'll appreciate how its open design keeps your magazines right at hand.

Holiday Centerpiece 24

This cheerful centerpiece will be a favorite for years to come. And if you want add to its appeal, we've included an optional base with a musical movement that plays a holiday melody as the tree rotates.

Desk Set 30

This desk set has two pieces: A catch-all box featuring a lid that holds those handy yellow note pads. And a taller box for pens, pencils, and letter openers. Both components feature square pegs and curved caps and can be built in a weekend.

Departments

Tips & Techniques 4
Shop Notes 22
Talking Shop 34
Sources 35

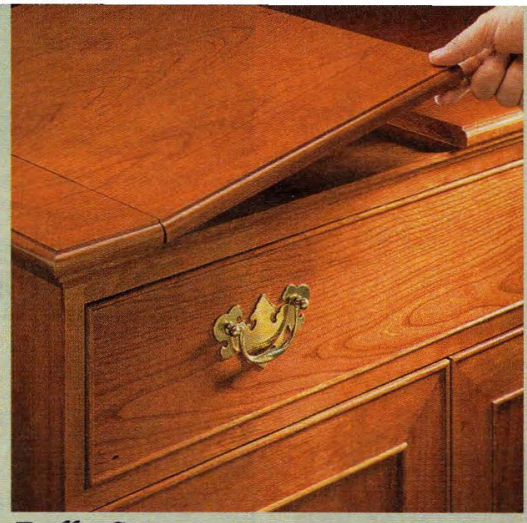

Buffet Server *page 6*

Magazine Rack *page 18*

Centerpiece *page 24*

Desk Set *page 30*

TIPS & TECHNIQUES

Shop-Made Sanding Block

I've always used a scrap piece of wood for a sanding block. It's simple and doesn't cost much. But there is a problem: The sandpaper tends to shift around and tear while I'm using the block.

But recently I came up with a way to hold the paper in place using plastic tubing. First, I used a Forstner bit to create a couple of rounded channels across the top of the block.

Then I rounded the nose of the block on a belt sander and routed a finger grip on each side, see detail 'a'.

The sandpaper is held in place by two pieces of ½"-dia. plastic tubing that are pressed into the channels, see photo and drawing.

To use the sanding block, simply secure the back end of the sandpaper with one of the plastic tubes. Then wrap the paper around the block and secure the other end in the same fashion.

Eugene R. Vizecky
Granite Falls, Minnesota

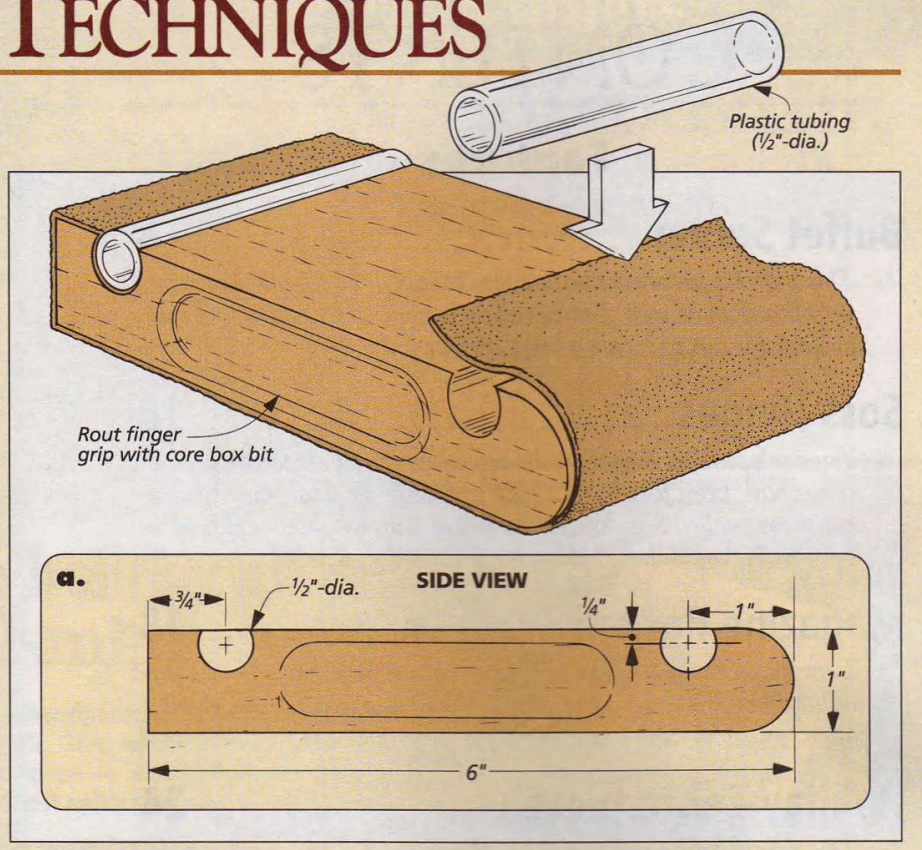

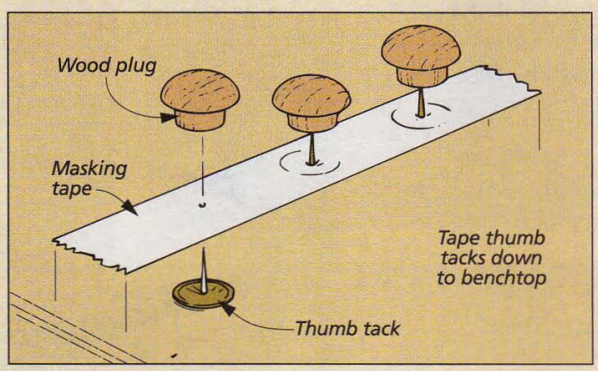

Finishing Wood Plugs

Whenever I use wood plugs, I generally like to stain or finish them before adding them to my project. The trouble is that since they're so small it's difficult to hold on to them.

To hold the plugs while applying the finish, I use thumbtacks. Just tape a row of them down to a piece of scrap and use them to hold the plugs in place.

When the plugs are dry, remove them and pull up the tape, tacks and all.

Susie Aasen
Olympia, Washington

Varnish Squeeze-Bottle

I use varnish on a lot of my projects. But instead of brushing the varnish straight from the can or pouring some into a separate container, I came up with a different solution.

I put the varnish in an empty dish soap squeeze-bottle, see photo. This way, I can just squeeze the varnish onto my project and brush it out.

Before closing the bottle, I can squeeze the air out to keep the varnish fresh.

Bob Oden
Rochester, New York

Taper Trick

When making tapered legs, I often use my jointer. I taper each side of the leg by making several passes over the jointer knives.

But the most difficult part of the process is cutting all the tapers evenly. It's not always easy to keep track of the number of passes I make on each side of the workpiece.

So to make sure that I'm removing the same amount of material from all four sides, I find the centerpoint on the bottom of the leg and draw a circle with a compass, see Fig. 1 below. The diameter of the circle is equal to the desired width of the end of the leg.

Then when I'm cutting the tapers, I know to stop once I've reached the edge of the circle, see Fig. 2.

Thomas Piazza
Virginia Beach, Virginia

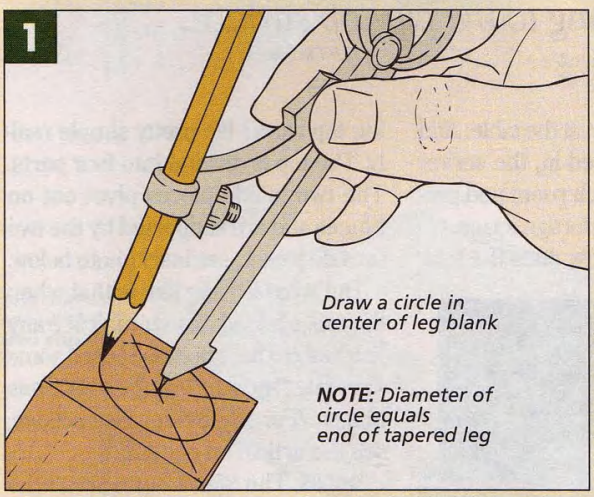

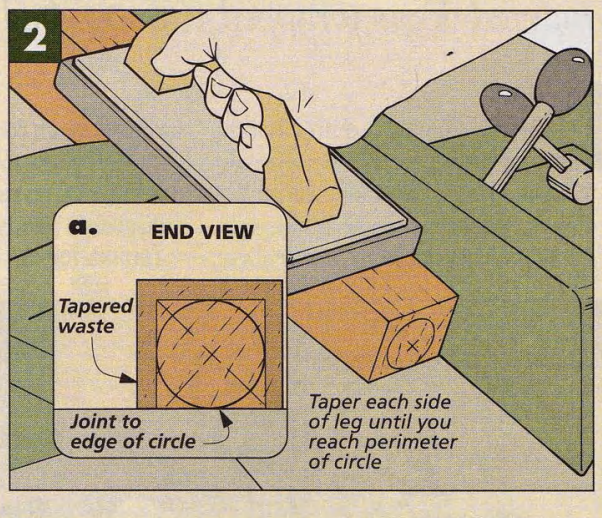

Drill Press Depth Stop

For a long time, I had trouble with the depth stop on my drill press. It seems the vibration from the motor caused the stop nuts on the collar to come loose.

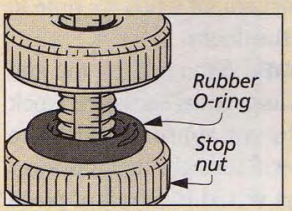

To solve this problem, I placed a rubber O-ring between the nuts. The ring absorbs the vibration, and the nuts stay put.

Warren Weber
Canon City, Colorado

Glue Bottle Plugs

I'm always losing the cap to my glue bottle. So I came up with an easy replacement. Just cut a tapered plug out of a plastic liquid detergent bottle.

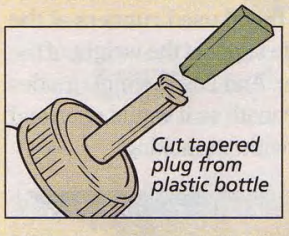

The plug is easy to grip, and if I lose it, there's always plenty more.

E. I. Schefer
Sands Point, New York

Cord Keeper

When wrapping the cord around a tool for storage, I like to thread the cord between the prongs of the plug. Then to hold the cord in place, I just slip a nail through the prong holes.

John Immel
Allyn, Washington

Custom Edging Sander

Recently I was making a table top with plastic laminate and solid wood edging. In order to sand the edging flush with the surface of the table without scratching the laminate, I made a custom sanding block, see drawing.

Simply cut a rabbet along the edge of the block the same width as the edging, see detail 'a'. Then attach a strip of sandpaper to the face of the rabbet.

Dean Curtis
Scottsdale, Arizona

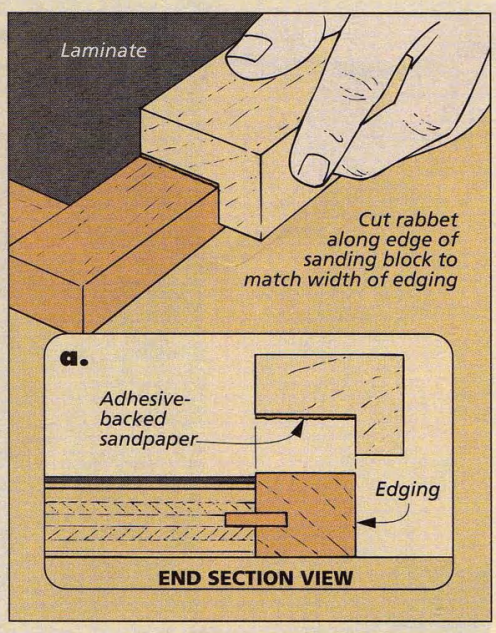

SUBMIT YOUR TIPS

If you would like to share an *original* shop-tested tip, send it to: *Woodsmith,* Tips and Techniques, 2200 Grand Avenue, Des Moines, Iowa 50312. Or if it's easier, FAX it to us at: 515-282-6741. Or use our E-Mail address: woodsmith@woodsmith.com.

Include a brief explanation and sketch or photo. If your tip is published, you'll receive $30 to $150, depending on the published length. And don't worry, we'll rewrite the tip and redraw the art, if necessary. Also, *please* include a daytime phone number.

FEATURE PROJECT

BUFFET SERVER

This server features some particularly interesting challenges: from the mitered doors wrapped with bead edging to the flip-top surface.

It's pretty easy to see how handy this buffet server can be. The top folds out to create more room for dishes. So for those large family gatherings, you never have to worry about having enough room at the table. And with the wings folded in, the server doesn't take up much room and provides some handy storage space.

FOLDING TOP. So how does the folding top work? It's pretty simple really. The top is divided into four parts. The two inside pieces pivot out on hinges and are supported by the two outside pieces, see inset photo below.

But what I really like is that when the top is folded in, you can't see any hardware. That's because I used some special, "hidden" hinges — Soss hinges. (For step-by-step instructions, see the article on page 16.)

DOORS. The Soss hinges aren't the only unique hinges in this project. The inset doors are mounted on "no-mortise" hinges, see page 13. Unlike traditional butt hinges, these hinges are easy to install and allow for quite a bit of adjustment when it's time to hang the doors.

DRAWER. Although the top and doors use special hardware, I took a different approach with the drawer. I thought metal drawer guides would look out of place here. So I used wooden guides.

The problem with wide drawers is they tend to rack and bind as they're opened and closed. To avoid this, I used runners at the sides to support the weight of the drawer. And I used simple guides underneath so it would open and close without racking.

When the guests have gone home and the dishes have been put away, you can simply fold the two wings of this server closed — with no hinges visible.

Construction Details

OVERALL DIMENSIONS:
35½"H x 35½"W x 21"D

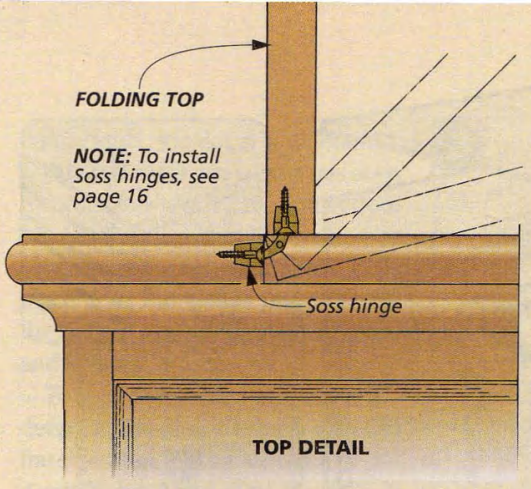

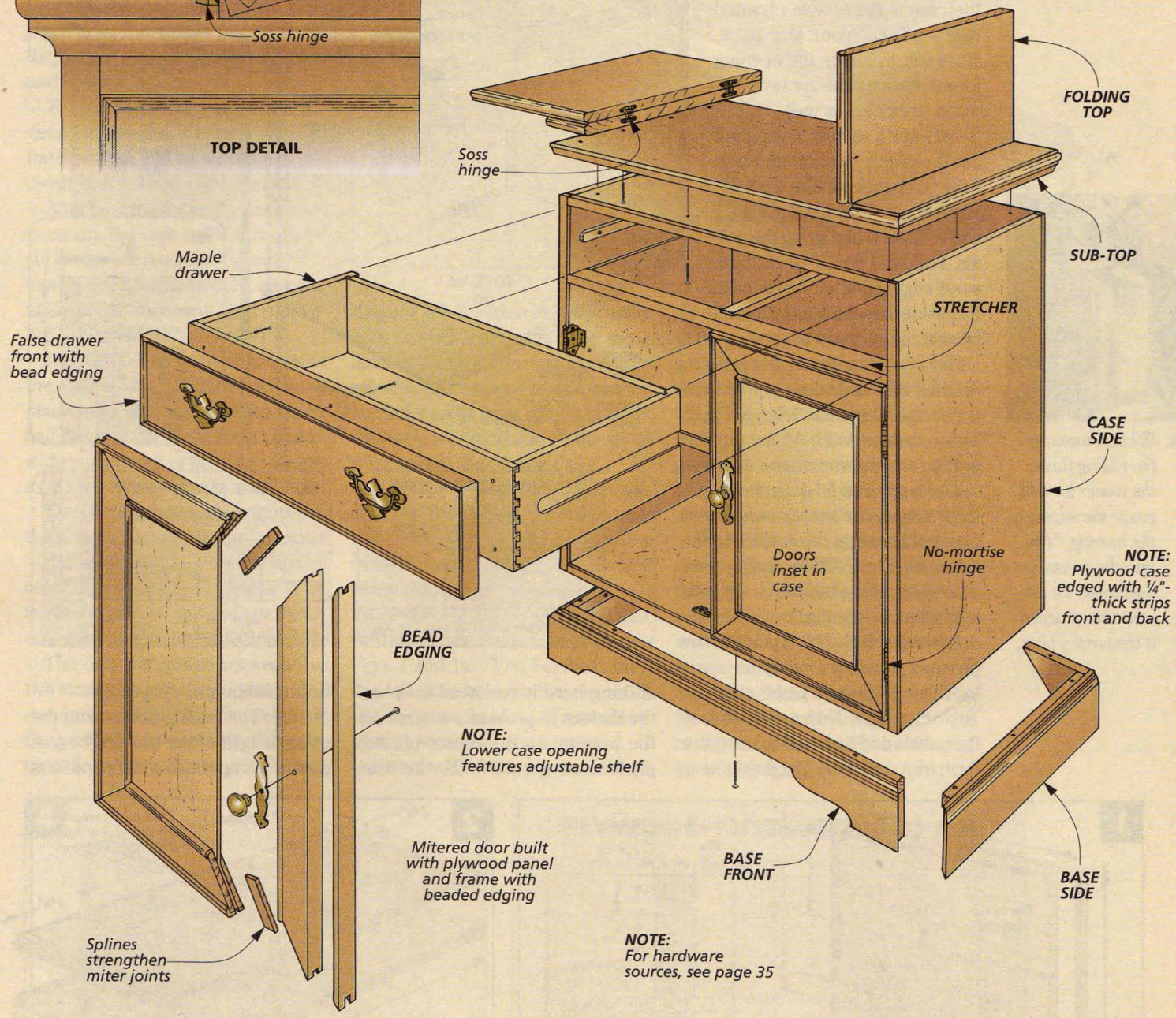

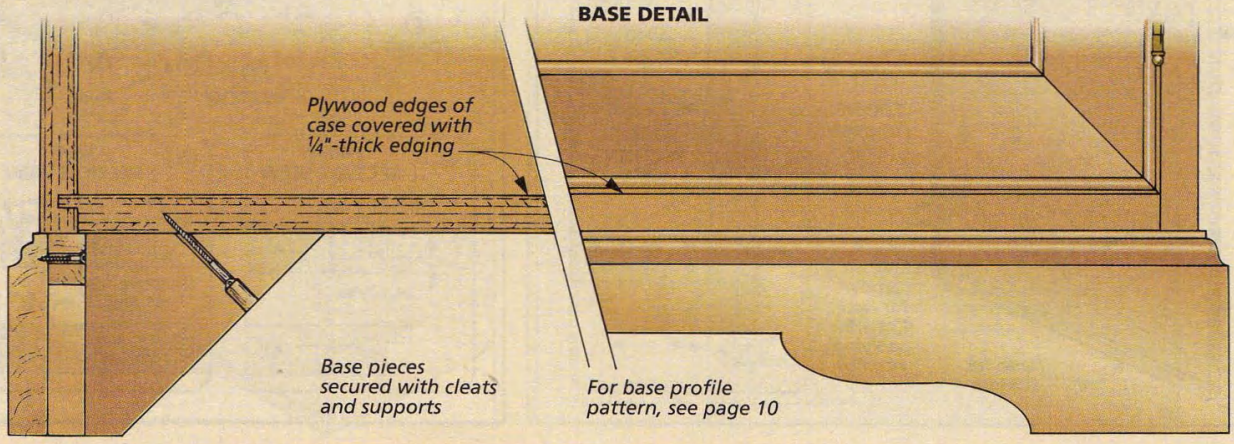

Case

There are a lot of different parts to this buffet server, but the place to start is with the case. Most of the case is made with plywood that's edged front and back. However, to create the opening for the drawer, there are two hardwood stretchers as well.

SIDES, TOP & BOTTOM. To begin, I cut the **sides (A)**, **top** and **bottom (B)** panels to size from ¾" plywood, see drawing and Figs. 1 and 2. Note: When sizing the panels, I allowed for ¼"-thick hardwood edging that will be added to the front *and* back to hide and protect the plywood edges.

But don't add the edging just yet. A series of ¼"-wide dadoes need to be cut on the side panels first, see Fig. 1. These dadoes will hold the top and bottom and the stretchers.

The next thing to do is create ¼"-thick tongues on the top and bottom panels that fit into the dadoes on the sides, see Fig. 2. These tongues are created by cutting rabbets on the ends of the panels, see Fig. 2a.

PLYWOOD EDGING. At this point, all the plywood panels are ready for some ¼"-thick **edging (C)**, see drawing. To do this, I glued extra-wide strips to the panels and trimmed them with a flush trim router bit. The only unusual thing here is you need to "plug" the dadoes to provide a surface for the bearing on the router bit, see photo in margin at left. (For more on this technique, see page 22.)

Note: The edging doesn't run the entire length of the top and bottom panels. It stops flush with the rabbets

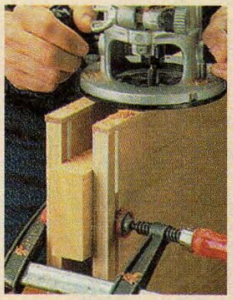

▲ *While trimming the edging flush, the router bit will gouge the edging as the bearing "dips" into the groove on the panel. To prevent this, I added a temporary plug.*

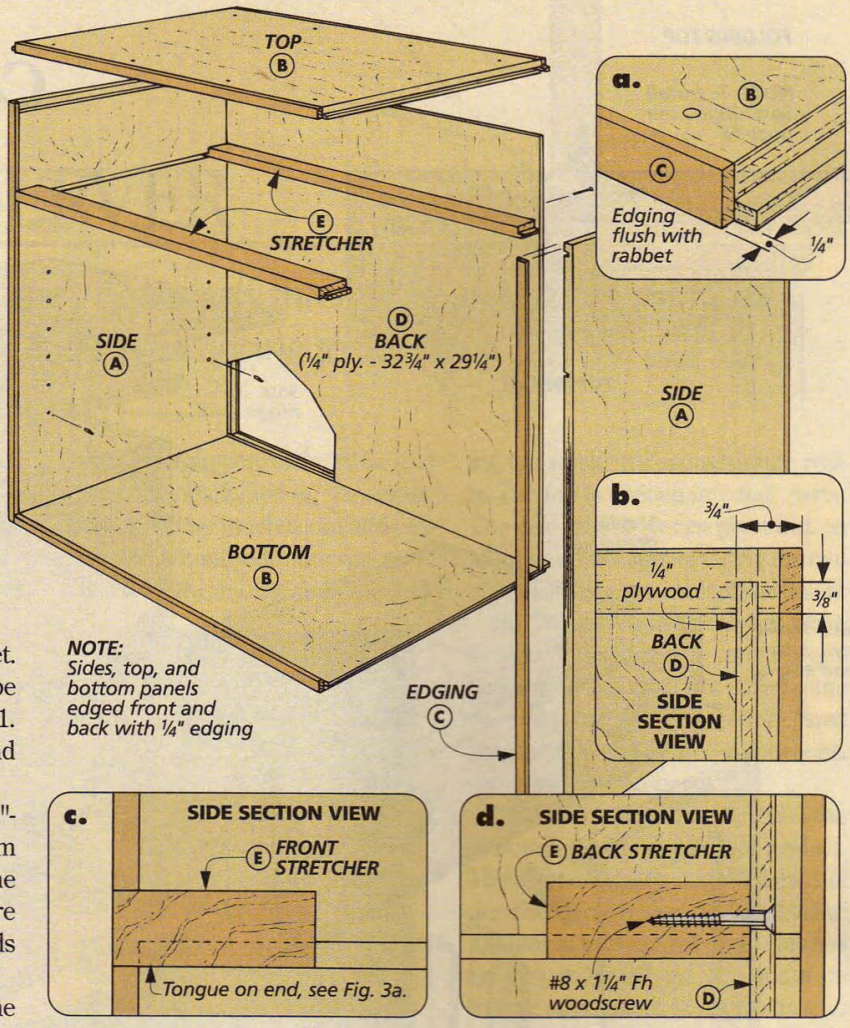

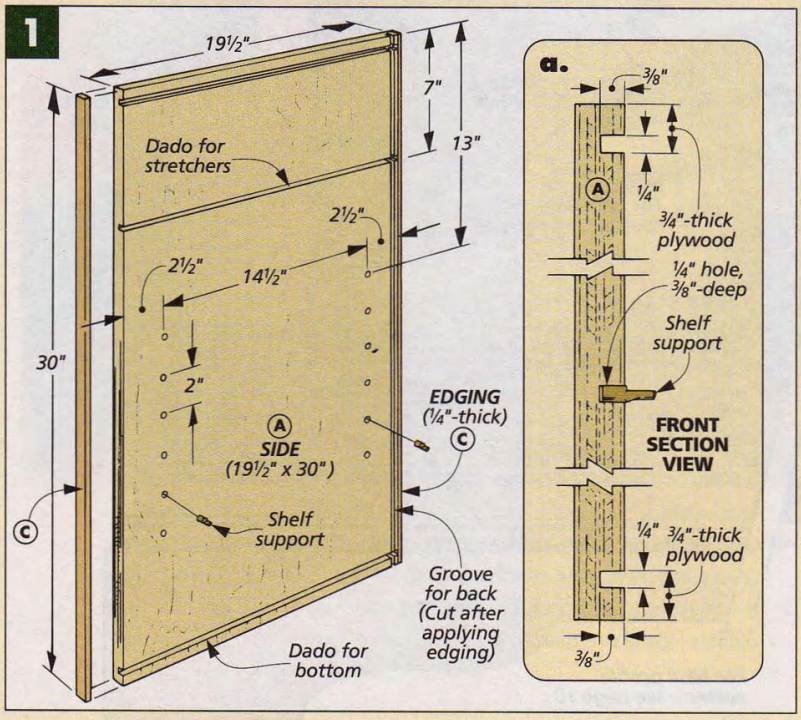

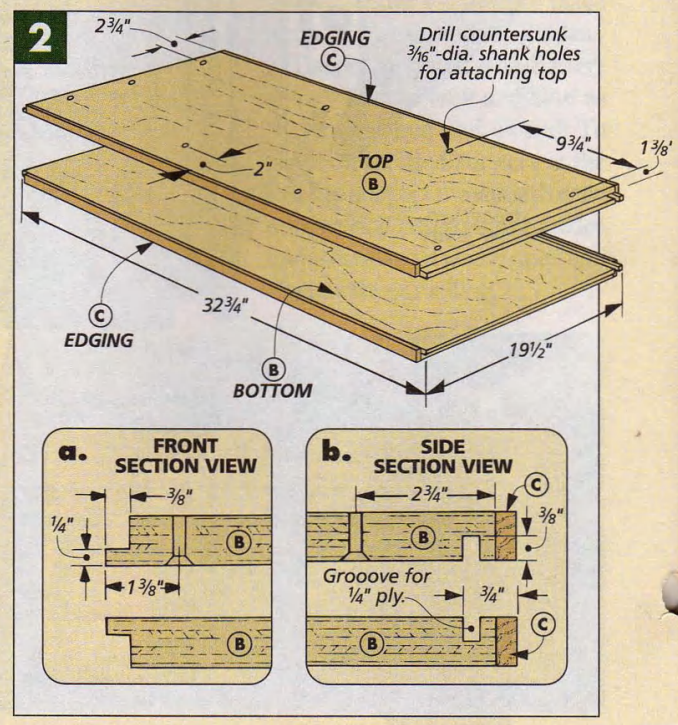

on the ends, see detail 'a' at left.

CASE BACK. After the edging has been trimmed flush on the top and bottom panels, the next piece to make is a 1/4"-thick plywood back panel. This piece does more than just close off the back. It also strengthens the case and keeps it square.

To hold the back, I first cut a 3/8"-deep groove along the back edges of the sides, top, and bottom panels, see detail 'b' at left and Figs. 1 and 2b.

After the grooves for the back have been cut, the case **back (D)** can be cut to size, see drawing. To determine its size, I dry assembled the case and measured the opening. (Just remember to allow for the grooves.)

STRETCHERS. The last two pieces of the case are the 3/4"-thick hardwood **stretchers (E)**, see drawing at left and Fig. 3. These pieces are ripped 2" wide and are cut to the same length as the top and bottom panels (32 3/4").

The stretchers fit in the grooves in the side panels just like the top panel — with a tongue, see details 'c' and 'd' at left. Here again, all you have to do is cut a rabbet on the ends to create a 1/4"-thick tongue, see Figs. 3a and 3b.

The only difference between the two stretchers is the one in front also requires a notch. This allows it to fit flush with the front of the edging on the sides of the case, see Fig. 3a and detail 'c' at left. This notch is actually easy to cut; you can use the same fence setting that you used to cut the rabbets. All you need to do is set the stretcher on its front edge and lower the blade so it cuts a notch the same thickness as the edging (1/4").

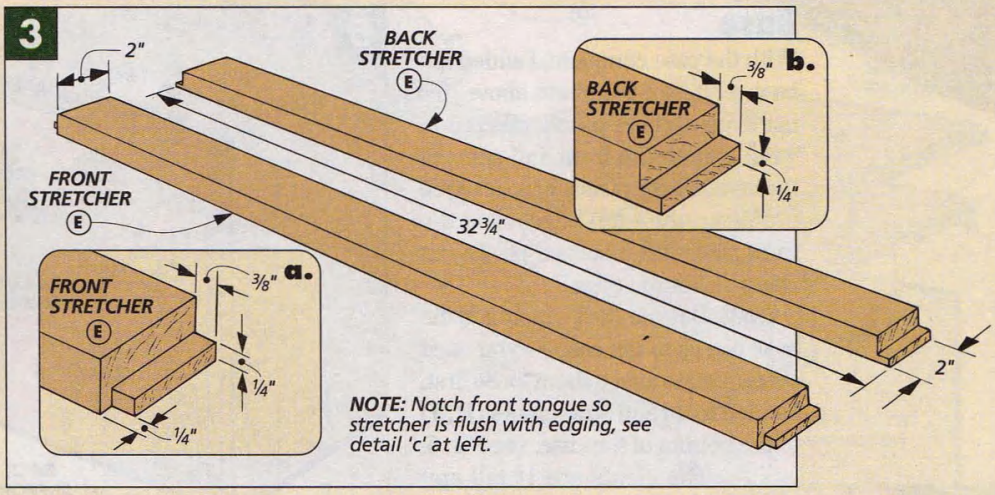

ASSEMBLY. At this point, the case could be assembled, but first I took the opportunity to drill some holes while it's easy to get at the inside face of the pieces. On the case sides (A), I drilled holes for 1/4" shelf pins that will hold a shelf that's added later, see Figs. 1 and 1a. Then I drilled countersunk pilot holes in the top panel (B), see Figs. 2 and 2a. These will be used to secure the top later on.

Now the case can be assembled. To do this, I laid a side panel down and fit the panels and stretchers into their grooves. Then I added the other side panel on top, stood the case upright and clamped it together. This is not a quick assembly, so be sure to dry assemble it to make sure everything goes together well and use a slow-setting glue. (I used white glue.)

SHELF. With the case assembled, you can step back and take a deep breath. All that's left with the case now is to add a shelf inside. I ripped the 3/4" plywood **shelf (F)** 17 3/4" wide and cut it to length so there was a 1/16" gap at each side. (Mine was 31 7/8" long.) The front of the shelf is edged like the case panels, except this time, I used 1/2"-thick **edging (G)**.

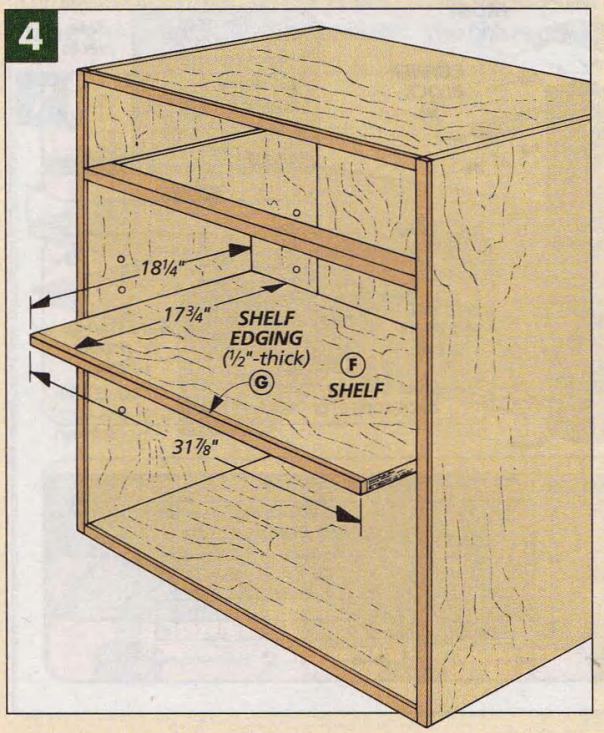

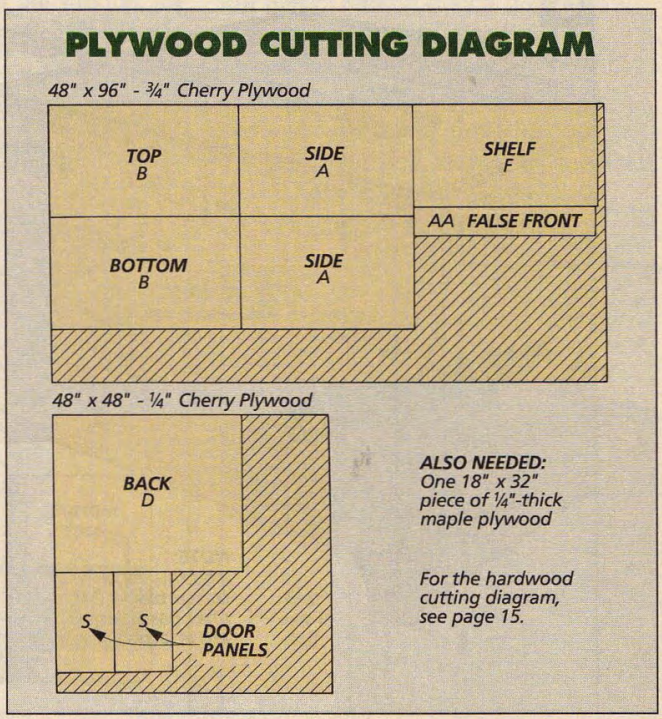

Base

With the case complete, I added the base next, see the photo above. It's made up of three pieces mitered to wrap around the front and sides of the case. These pieces have an ogee profile on their top edges, and the front piece has a curved profile cut along its bottom edge.

CLEATS. But you can't simply add the base pieces to the case — you need something to attach them to. So first, I added **front** and **side cleats (H, I)** to the bottom of the case, see Fig. 5.

▲ *To eliminate the saw marks on a straight edge between profiles, attach a scrap guide with double-sided tape and use a flush trim bit.*

The cleats are 1" tall and have two sets of countersunk pilot holes drilled in them. One set is for screwing the cleats to the case, and the other is for attaching the base pieces to the cleats.

The cleats set back 1/8" on the front and sides of the case, see Fig. 5a. But they stop 3/4" short of the back edge. This creates room for two **back supports (J)** that can be added next. These are cut the same height as the base pieces (4").

BASE PIECES. After the back supports are glued and screwed to the case, the **base front (K)** and **sides (L)** can be added, see Fig. 6. These 3/4"-thick pieces are ripped 4" wide. But before mitering them to length, I routed the ogee profile along the top, outside edge of each, see Fig. 6a.

Now the three base pieces can be mitered so they wrap around the case with an 1/8" shoulder, starting with the base front, see Fig. 6. And when the front corners are complete, the back ends of the sides can be cut flush with the back of the case.

Before attaching the base pieces, I laid out and cut the curved profile on the front, see Fig. 6c. The straight section was shaped by roughing out the line with the band saw and then routing it straight with a flush trim bit and a straightedge, see margin photo. (You'll need to clean up the corners with a chisel or sandpaper.)

CORNER BLOCKS. When the base pieces have been glued and screwed to the supports, I glued short, 3/4"-square **corner blocks (M)** into the front and back corners of the base to strengthen this joint, see Fig. 6.

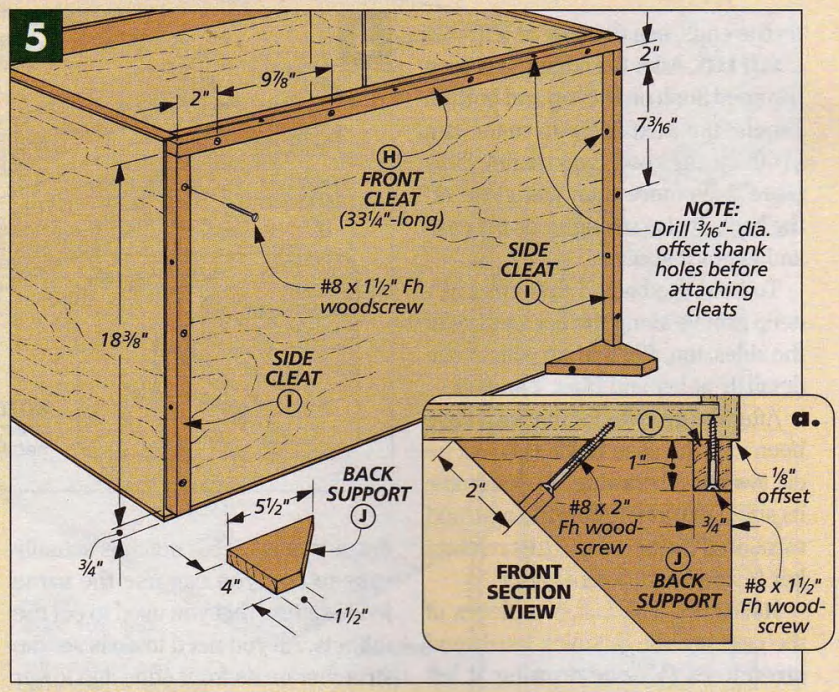

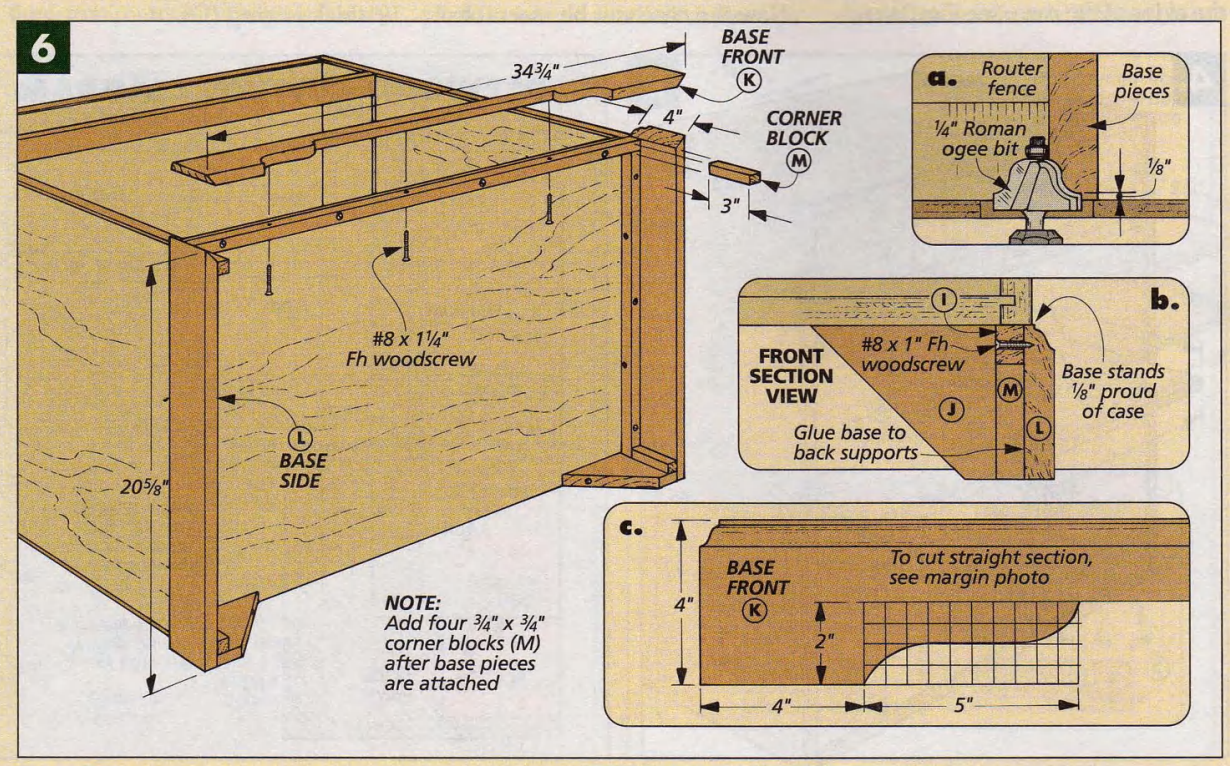

Top

Now the buffet can be set right side up so you can add the top. The top of the buffet is made up of two long, hardwood panels: a sub-top and the folding top, see drawing at right.

SUB-TOP. The first thing to do is glue up a ¾"-thick panel for the **sub-top (N)**, see Fig. 7. When cutting this panel to size, it should end up flush with the back edge of the case but overhang the front and each side ⅝", see detail 'a' at right and Fig. 7. (My sub-top was 20⅝" x 34¾".)

With the panel cut to size, next I routed a ½" cove profile on the front and side edges, see Figs. 7 and 7a. Then I drilled four countersunk pilot holes on each end. (Countersink the bottom face.) These are for securing the folding top to the sub-top later.

FOLDING TOP. Next, I started on the **folding top (O).** It starts out as another long, ¾"-thick panel, see Fig. 7. I first ripped the folding top 21" wide so it would overhang the front edge of the sub-top ⅜", see detail 'a' above.

The folding top overhangs the sub-top ⅜" on the sides, too. But when initially cutting the panel to length, I added ⅜" to the final length to allow for the three saw kerfs that will be made when cutting the panel later. (My panel started off 35⅞" long.)

Before cutting the panel, I routed a profile along its front and side edges. Using a ¼" round-over bit, the first thing to do is round over the bottom edge, see Step 1 in Fig. 7b. Then flip the panel over to rout another roundover. But this time, raise the bit to create a ⅛" shoulder along the top edge, see Step 2 in Fig. 7b.

Now the folding top can be cut into four pieces, see Fig. 8. To do this, I used my rip fence, cutting the long panel in half first and then cutting off the 4"-long pieces on each end.

TOP ASSEMBLY. Before the folding top can be attached to the sub top, the two halves of each folding top must be joined with Soss hinges. These hidden hinges require some careful layout and accurate mortises. (For more on installing these hinges, see page 16.)

With the hinges mortised into the folding top, the short 4"-long end pieces can be glued and screwed to the ends of the sub-top, see drawing above. The backs of these panels are flush and the folding top is centered side-to-side. But the important thing here is the gaps between the folding-top halves should match the gaps where the halves are joined with the hinges, see detail 'a' above.

With the folding top and sub-top screwed together, all that's left is to screw them to the case, making sure the tops overhang the case the same on each side, see detail 'a' above.

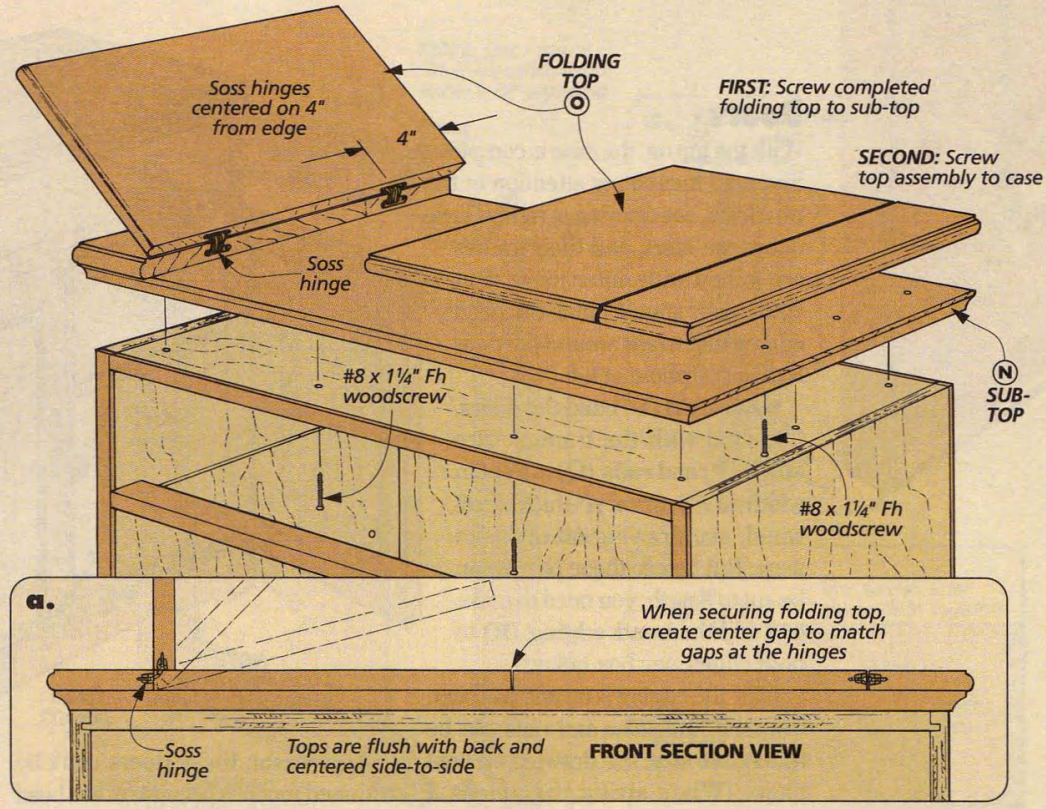

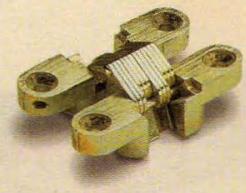

▲ *The folding top on this server uses "hidden" Soss hinges. For step-by-step directions for installation, see page 16.*

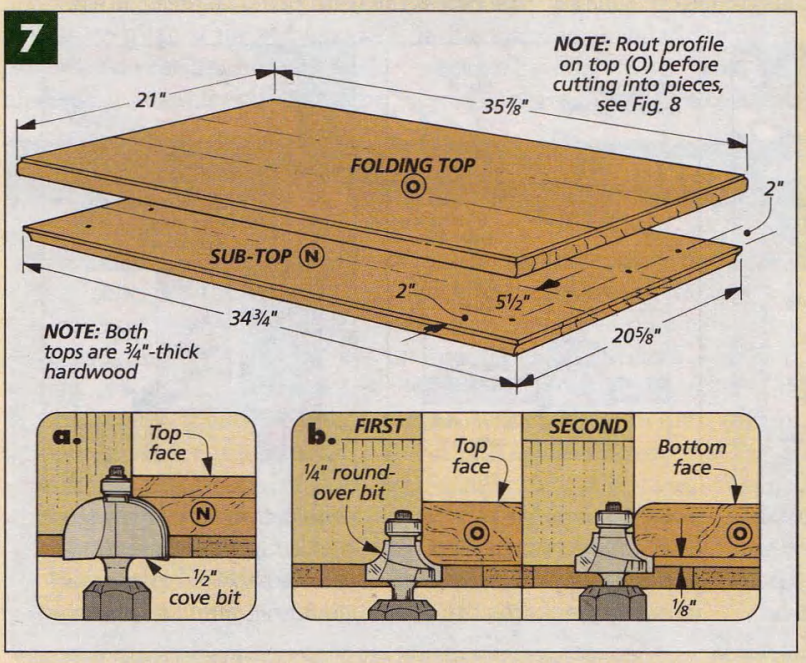

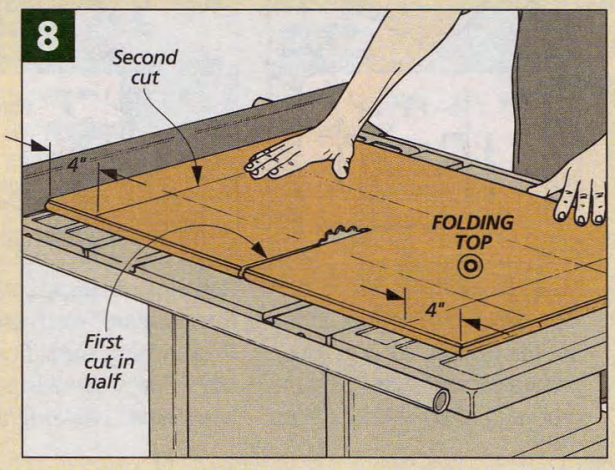

Doors

With the top on, the case is complete. So next I turned my attention to the two doors, see drawing at right. These doors are inset, and their frames are joined with miter joints. But what really stands out is the bead edging that wraps around the door frame, see photo at left.

FRAME PIECES. To build the doors, I started with the frames. The **stiles (P)** and **rails (Q)** are cut to width (2¼") from ¾"-thick hardwood, see drawing on opposite page. But before these pieces can be cut to length, you need to make and add the **bead edging (R)** to both edges, see box below.

After the edging is on and has been trimmed, the stiles and rails can be mitered to size, see drawing on next page. (When sizing the pieces, I allowed 1/16" gaps around and between the doors, see details 'a' and 'b' above.)

Usually I build an inset door to fit its opening exactly. This way, I can trim it so the gaps around the doors are all the same. But this method won't work with these doors.

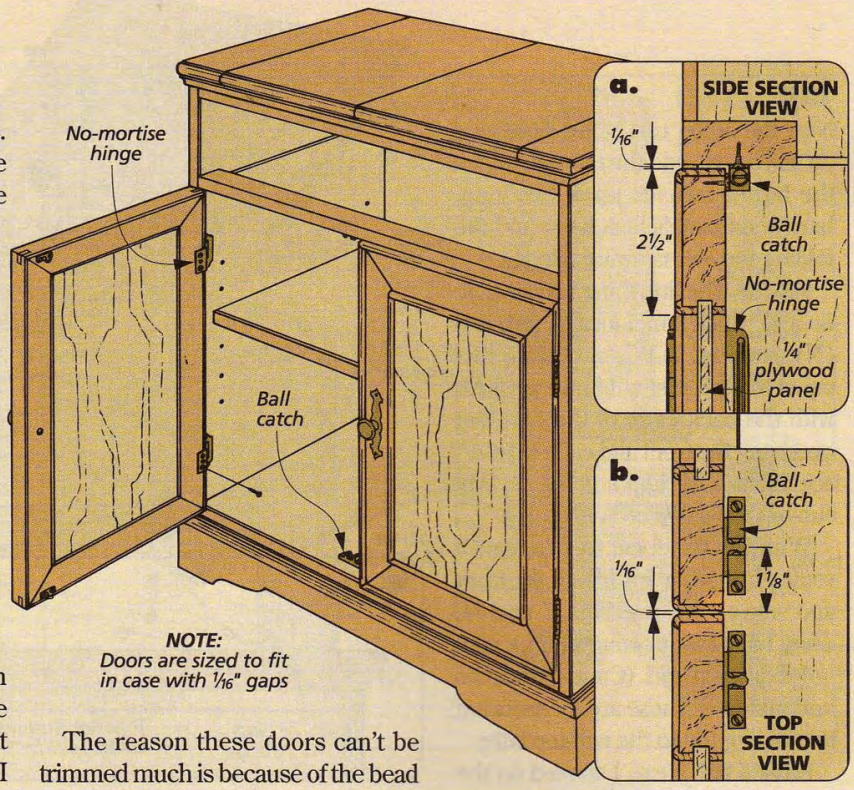

The reason these doors can't be trimmed much is because of the bead molding that's applied around the edges. It's too thin to allow you to trim much off without it being noticeable. So when mitering the rails and stiles to length, you need to be as accurate as possible so any trimming will be kept to a minimum.

SPLINES & DOOR PANELS. With the door pieces cut to size, the next thing I did was cut some ¼"-deep grooves along the inside edges and along the ends of each piece, see drawing on next page and Fig. 9. The grooves on the

MAKING THE EDGING

One of the distinctive features of the doors on this buffet is the bead molding that stands proud of the frames on the inside and outside edges.

The trick with this molding is attaching it to the frame pieces so it stands proud the same all around the door. (Things tend to slide when you add glue.) But I came up with a simple solution: I used a groove to "lock" the molding in position. Then after the molding is attached, the excess can be trimmed on the table saw.

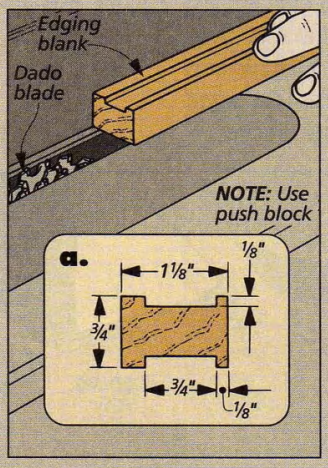

Cut groove. *Starting with a ¾"-thick blank, cut a ⅛"-deep groove on both faces. Size the groove to hold the door pieces.*

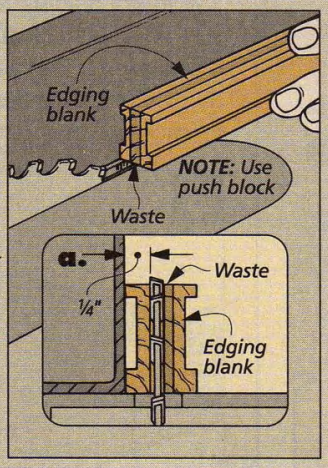

Resaw blank. *Next rip two ¼"-thick edging strips from each blank. Be sure to use a push block when making this cut.*

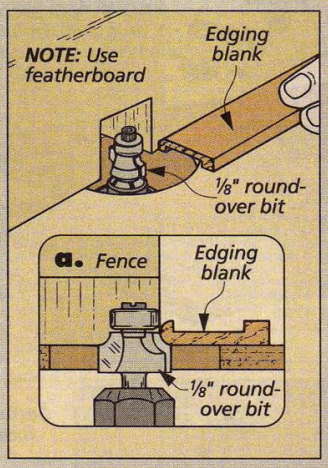

Round over edge. *Now using a ⅛" round-over bit and the router table fence, rout both outside edges of the strips.*

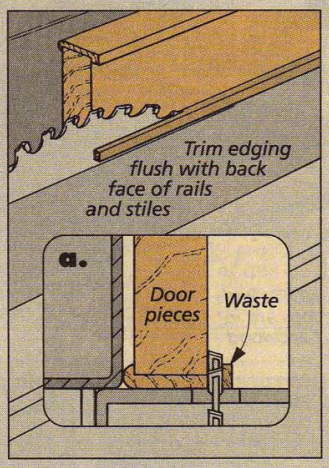

Glue & trim. *After the edging is glued to the rails and stiles, trim the back edge of the molding flush, using the table saw.*

edges will hold a 1/4" plywood panel. And the grooves on the ends will hold some splines, which will strengthen the miter joints.

Unfortunately, to cut these grooves, you can't use a dado blade because 1/4" plywood is less than 1/4" thick. So for each groove, I made two passes with a regular blade, see Fig. 9. And because of the bead molding on the edges, the inside face has to stay against the fence. So to sneak up on the final width of the groove, you need to nudge the rip fence over a bit for the second pass.

Cutting the grooves on the edges of the frame stiles and rails is easy, see Fig. 9. But when it's time to cut the grooves on the ends, the pieces are too narrow to pass over the blade safely. So I decided to add a little extra support, see page 23.

When the grooves were cut, I dry assembled the frames and measured and cut the plywood **panels (S)** to fit in the grooves, see drawing above. (My panels were 11 13/32" x 17 5/8".)

ASSEMBLY. Before gluing the doors together, I made hardwood splines to fit the grooves in the corners. Since these splines stick out at the corners of the frame, they'll need to be trimmed with a chisel after the doors are assembled, see detail 'b' above.

MOUNTING THE DOORS. With the doors completed, the next step is to mount them in the case. Since these are inset doors, it's important that they end up with an even gap all the way around. So I used no-mortise hinges, which allow you to adjust the position of the doors somewhat, see box below.

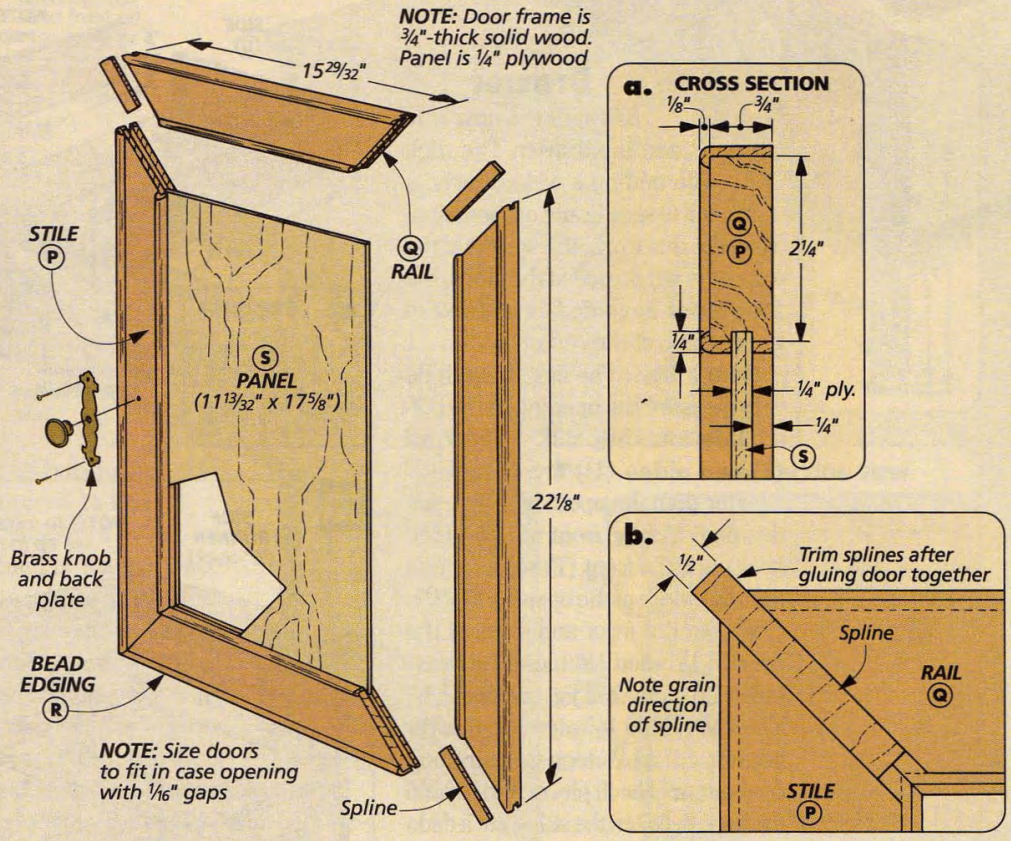

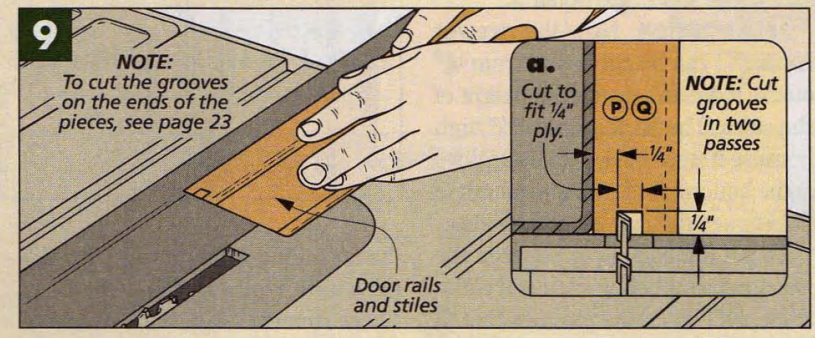

HARDWARE. With the doors mounted in the opening, I added the other pieces of hardware. First, I mounted brass knobs with back plates to the door stiles, see drawing above. Then to hold the doors closed, I added double ball catches at the top and bottom of the doors, see drawing and details 'a' and 'b' on page 12.

NO-MORTISE HINGES

One problem with traditional butt hinges is that they require some precisely cut mortises. So with this project, I tried a type of hinge I hadn't used before: a no-mortise hinge. With these, the leaf attached to the case fits around the leaf attached to the door. So there are no mortises to cut.

But what I really like is that there's some built-in adjustment. The hinge has slotted shank holes in the leaves that allow you to move the door side-to-side and up-and-down.

INSTALLATION. To mount these hinges, I screw them to the case first. Next, I set the door on a couple 1/16"-thick shims inside the case opening. This sets the gap along the bottom of the door, so you can reach inside and mark the position of the slotted pilot holes on the back of the door.

Now, the pilot holes can be drilled, and the door can be mounted in the case. But you're not quite through yet. You need to step back and check the gaps around the door. And if needed, you can even out the gaps by adjusting the hinge screws.

When the door fits, simply install the last two screws to "lock" the door in place.

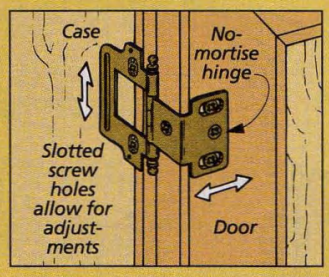

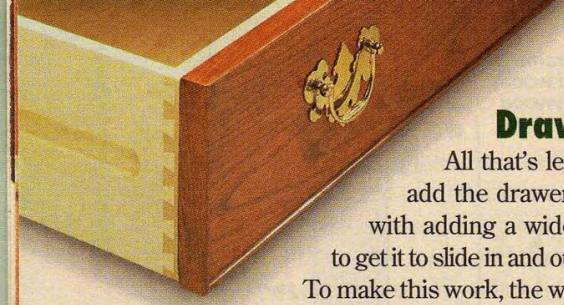

Drawer

All that's left now is to add the drawer. The trick with adding a wide drawer is to get it to slide in and out smoothly. To make this work, the weight of the drawer is *supported* at the sides, but the drawer is guided *in* and *out* of the opening at the center.

FRONT & SIDES. The first thing to do is to measure the opening in the buffet. (Mine was 5½" x 32".) The **front (T)** and **sides (U)** are ripped ¼" shorter than the opening (5¼"), see drawing. (A false front will be added later.) And the front (T) is cut ⅛" less than the width of the opening (31⅞").

To join the front and sides of the drawer, I routed ½" half-blind dovetails with a dovetail jig, see detail 'b'. Then to hold a ¼"-plywood drawer bottom, cut a ¼"-deep groove along the bottom of each piece. And to hold the back between the sides, cut a dado across the sides, see detail 'a'.

BACK & BOTTOM. Now the drawer **back (V)** can be cut to size from ½" stock. It doesn't match the height of the sides. The back is only 4¾" high because it stops flush with the groove at the bottom. And it's cut to length to fit between the dadoes in the sides.

To get the back to fit between the sides, cut a rabbet on each end of the back piece to create tongues that fit in the dadoes, see detail 'a'. Then I dry assembled the drawer and cut a **bottom (W)** from ¼" maple plywood.

Before gluing the drawer together, rout a stopped groove on the outside of each side piece to accept some side runners, see drawing above. Then the drawer can be glued together.

SIDE RUNNERS. To mount the drawer, the first thing I did was add the ¼"-thick **side runners (X)** to the case. These runners support the weight of the drawer, see Fig. 10.

To allow the drawer to slide smoothly, the runners have to be positioned so the drawer will set just above the stretchers. The easiest way to do this is cut a spacer to set the runner on, see drawing in margin. (The runners butt against the back of the case.)

GUIDE. The next piece to add is the ¾"-thick **guide (Y)** inside the case, see Fig. 10. It's 1½" longer than the distance between the front and back stretchers (E). Then a ¾" x ½" rabbet is cut on both ends, see Fig. 10a.

To add the guide, all you need to do is center it in the opening and glue it in place. The critical thing is that it's parallel to the sides and square to the stretchers, see Fig. 10b.

CENTER RUNNERS. The guide, by itself, doesn't guide the drawer. So I added

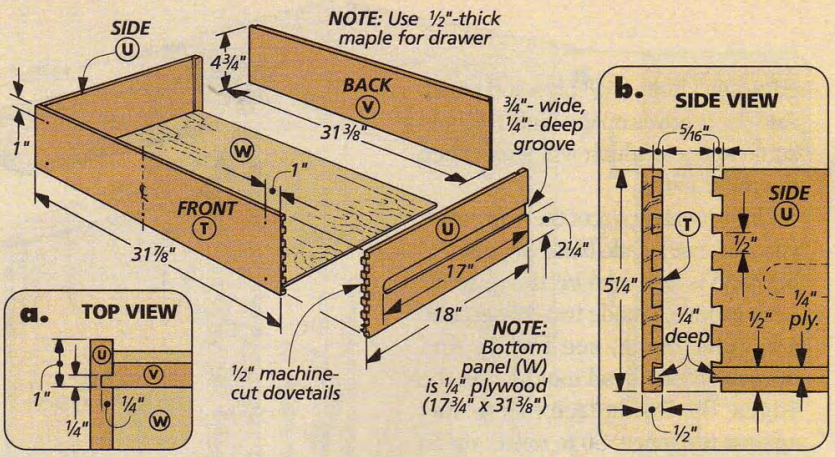

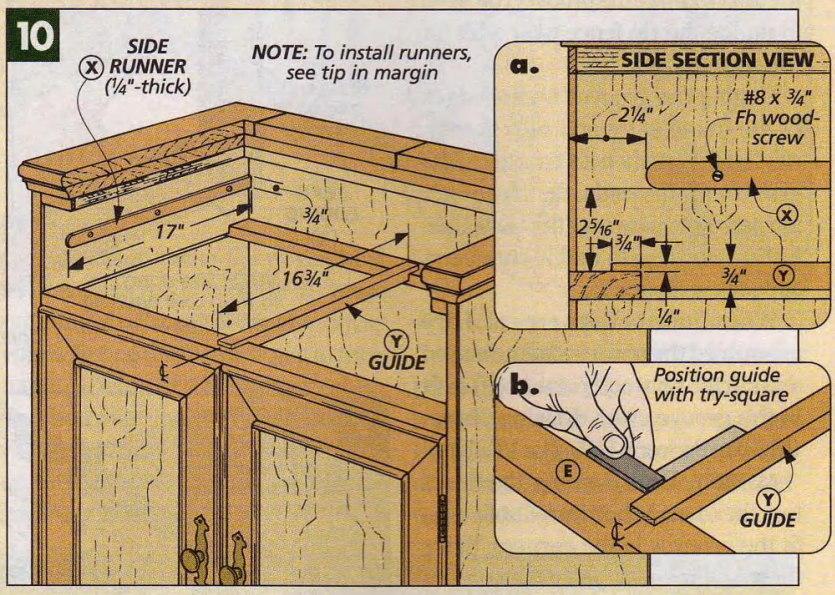

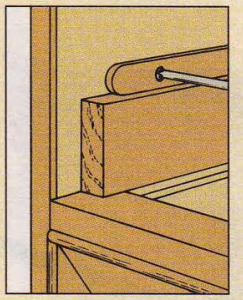

▲ *One easy way to position the runners correctly is to set them on a simple spacer.*

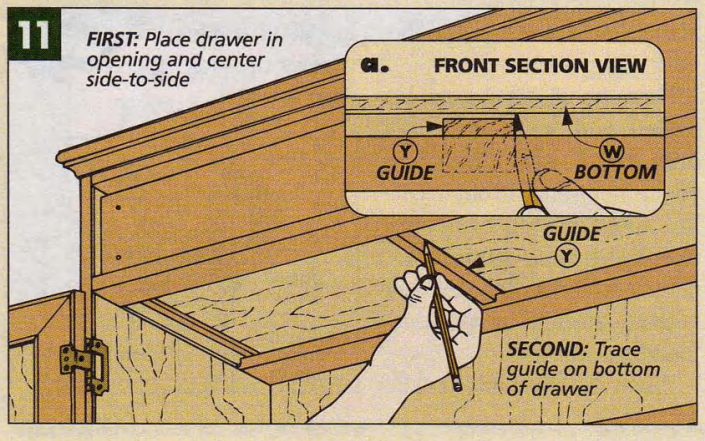

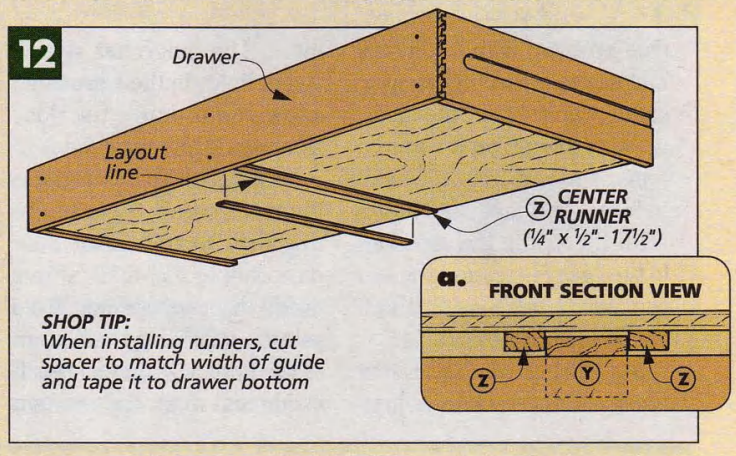

two **center runners (Z)** to the drawer bottom. These 1/4" x 1/2" pieces are easy to make, but positioning them takes a bit more work.

To do this, I set the drawer in place and centered it side-to-side. Then I reached inside the case and traced the guide onto the drawer bottom, see Fig. 11. After removing the drawer, I cut a spacer the same size as the guide and clamped it between the layout lines. Now it's a simple matter to glue the runners in place, see Fig. 12.

FALSE FRONT. All that's left now is to add the **false front (AA)**. The trick is cutting it to final size. That's because it has 1/8" edging just like the doors.

To do this, I started with the drawer opening (5 1/2" x 32") and then subtracted from each *edge* 1/16" for the gap between the drawer and case and 1/8" for the edging.

With the false front cut to size, I made the **edging (BB)** around the outside, see detail 'a' at right and the box on page 12. (This is similar to the edging on the doors, but this time, the strips have to be mitered to final size *before* they're glued in place.) Once the edging is applied, you can screw the false front to the drawer front and add the pulls.

Now all that's left is to add the finish. I removed the hardware and stained the buffet with Zar's cherry stain. (This evens out any color differences between the plywood and solid wood.) Then I applied a few coats of a wipe-on polyurethane finish. W

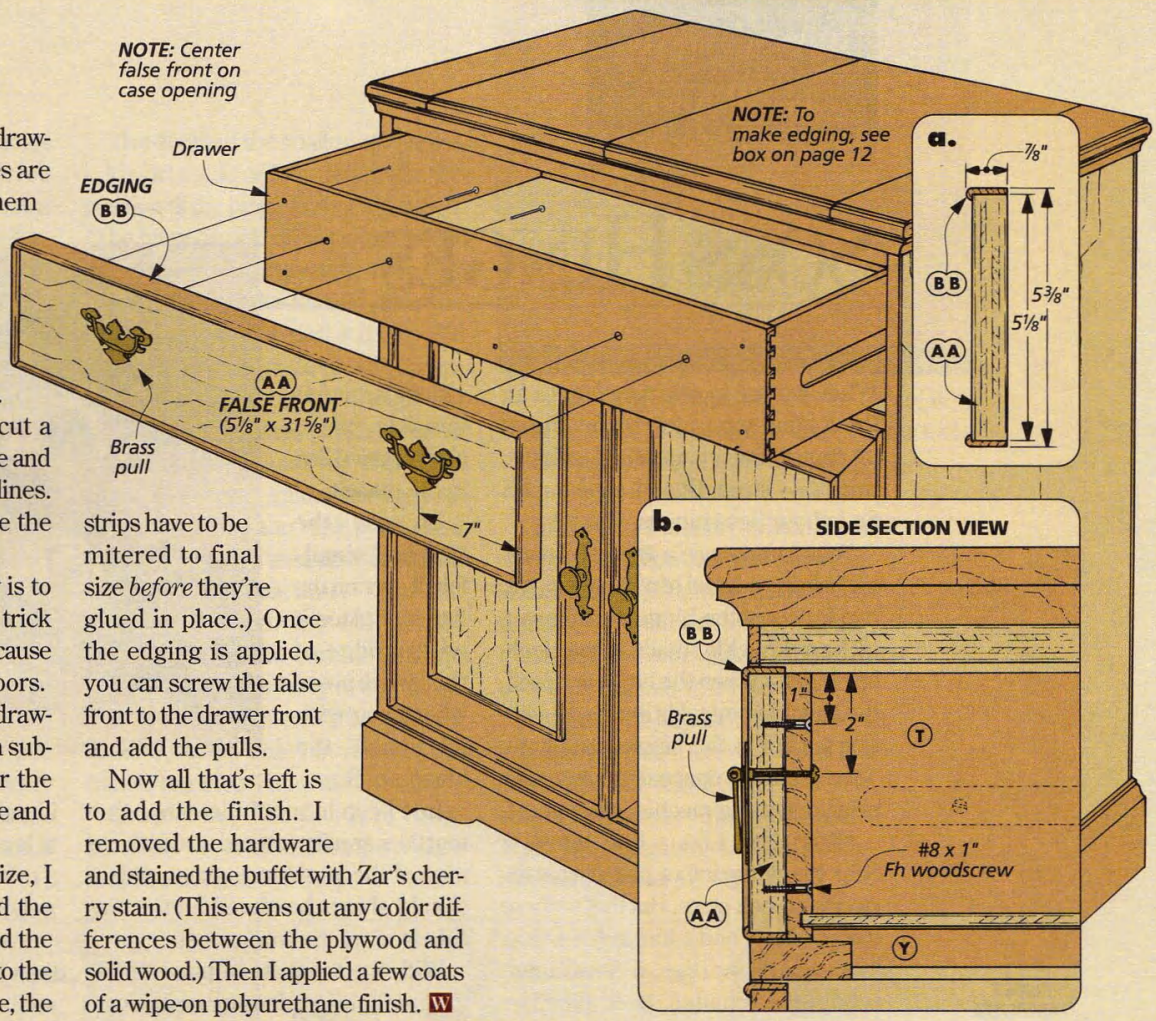

MATERIALS & SUPPLIES

CARCASE		
A Sides (2)	3/4 ply. - 19 1/2 x 30	
B Top/Bottom (2)	3/4 ply. - 19 1/2 x 32 3/4	
C Edging (1)	3/4 x 1/4 - 260 rgh.	
D Back (1)	1/4 ply. - 29 1/4 x 32 3/4	
E Ctr. Stretchers (2)	3/4 x 2 - 32 3/4	
F Shelf (1)	3/4 ply. - 17 3/4 x 31 7/8	
G Shelf Edging (1)	3/4 x 1/2 - 31 7/8	
BASE & TOP		
H Front Cleat (1)	3/4 x 1 - 33 1/4	
I Side Cleats (2)	3/4 x 1 - 18 3/8	
J Back Supports (2)	3/4 x 4 - 6 rgh.	
K Base Front (1)	3/4 x 4 - 36 rgh.	
L Base Sides (2)	3/4 x 4 - 22 rgh.	
M Corner Blocks (4)	3/4 x 3/4 - 3	
N Sub-top (1)	3/4 x 20 5/8 - 34 3/4	
O Folding Top (1)	3/4 x 21 - 35 7/8	
DOORS & DRAWER		
P Door Stiles (4)	3/4 x 2 1/4 - 23 rgh.	
Q Door Rails (4)	3/4 x 2 1/4 - 17 rgh.	
R Bead Edging (1)	3/4 x 1/4 - 320 rgh.	
S Door Panels (2)	1/4 ply. - 11 13/32 x 17 5/8	
T Drawer Front (1)	1/2 x 5 1/4 x 31 7/8	
U Drawer Sides (2)	1/2 x 5 1/4 x 18	
V Drawer Back (1)	1/2 x 4 3/4 x 31 3/8	
W Drwr. Bottom (1)	1/4 ply. - 17 3/4 x 31 3/8	
X Side Runners (2)	1/4 x 3/4 - 17	
Y Guide (1)	3/4 x 1 - 16 3/4	
Z Ctr. Runners (2)	1/4 x 1/2 - 17 1/2	
AA False Front (1)	3/4 ply. - 5 1/8 x 31 5/8	
BB Edging (1)	3/4 x 1/4 - 80 rgh.	

- (2) Brass Drawer Pulls w/Machine Screws
- (2) Door Knobs w/Back Plates
- (2 pr.) 13/16" Partial-wrap No-Mortise Hinges
- (2 pr.) 3/8" No. 101 Soss Hinges
- (4) Spoon-style Shelf Supports
- (4) Ball Catches
- (2) #8 x 2" Fh Woodscrews
- (10) #8 x 1 1/2" Fh Woodscrews
- (22) #8 x 1 1/4" Fh Woodscrews
- (6) #8 x 3/4" Fh Woodscrews
- (13) #8 x 1" Fh Woodscrews

HARDWOOD CUTTING DIAGRAM

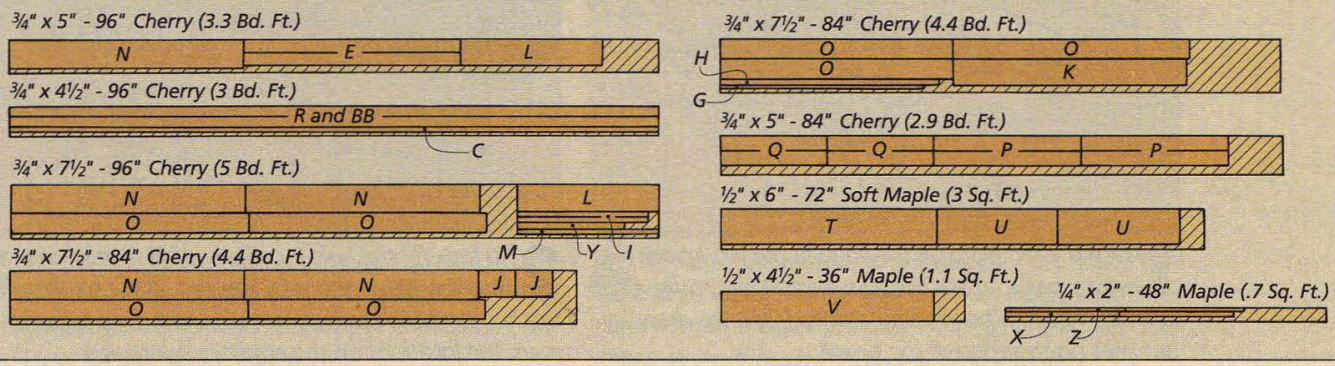

SOSS HINGES

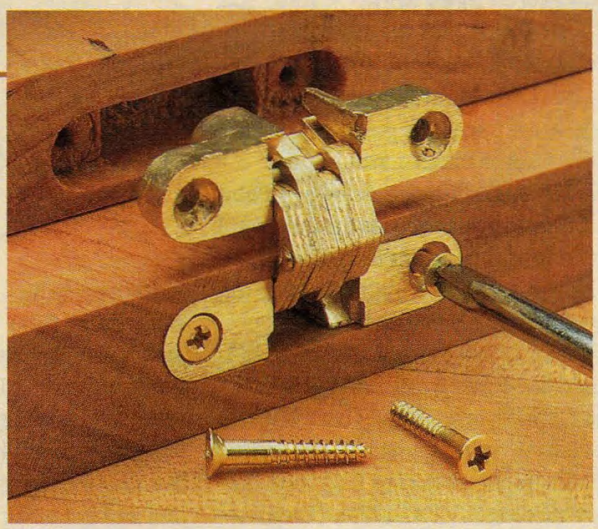

When it came to selecting hinges for the folding top of the buffet shown on page 6, I was concerned with two things — strength and appearance. So I chose Soss hinges.

Soss hinges are a type of "invisible" hinge. Instead of a hinge pin, the two leaves of the hinge are connected by a "knuckle" made of interlocking fingers. When the hinge is closed, the knuckle joint folds into itself, within a pocket in the hinge, see photo. The result is a concealed hinge that provides strong mechanical support.

INSTALLATION. Like a butt hinge, a Soss hinge fits into a pair of mortises cut on each piece. But that's where the similarity ends. Instead of a shallow, square mortise, a Soss hinge requires a rounded, deep mortise, see photo on opposite page.

Normally, I would make each mortise by drilling a series of holes on a drill press and then cleaning up the mortises with a chisel. But because the folding top pieces of the buffet that receive the hinges are too tall to be supported on a drill press, I had to use a hand held drill. This created some interesting challenges. But more on that later.

LAYOUT. To help lay out the holes that create each hinge mortise, Soss provides a paper template. (We've also included one in the margin.)

To use the template, simply fold it over on the line and place it on the edge of the workpiece where you wish to install the hinge, see Step 1.

Just keep in mind that since the mortises aren't centered on the thickness of the workpiece, the template should always be placed on the outside faces of the workpieces.

With the template in place, mark the four hole locations for each hinge with a sharp awl. Shop Note: To position the template, I drew a centerline on my workpiece for each hinge.

TRANSFERRING THE HOLE LOCATIONS. After marking the centerpoints of the holes, use a square to draw guidelines through each centerpoint, see Step 1a. Now the hole locations can be laid out on the other piece. But this calls for some creative thinking.

In order for the two pieces to line up once the hinges are installed, both sets of hinge mortises must be laid out identically. But using a tape or ruler to lay out identical hole locations isn't a reliable method, since it's easy for a slight error to creep in.

Instead, I transferred the hole locations directly from the first piece to the second piece. To do this, start by hammering four small brads halfway into the hole locations on the first workpiece. Then snip off the heads of the brads, leaving about 1/4" exposed.

Now to transfer the hole locations, simply place both workpieces down on a flat surface against a straight edge. (I used the rip fence on my table saw.) The fence ensures the ends of the pieces are flush. A quick rap with a mallet transfers the locations from one to another, see Step 2. Then the brads can be removed.

HINGE TEMPLATE

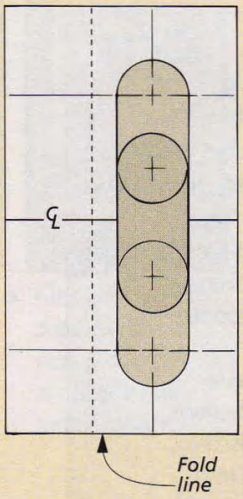

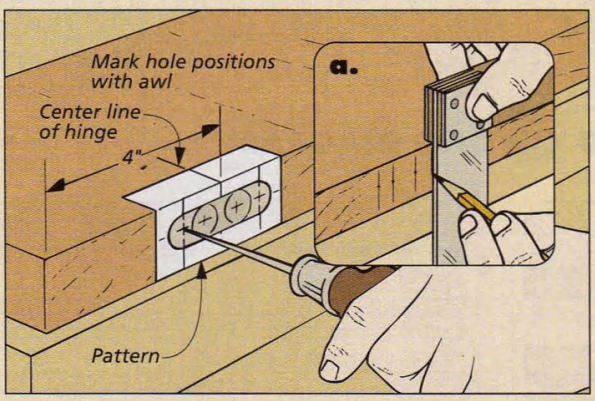

1 *Place the template on the edge of the workpiece and use an awl to mark the four hole locations for each mortise. To aid in positioning a dowel jig later, draw layout lines on the edge of the board.*

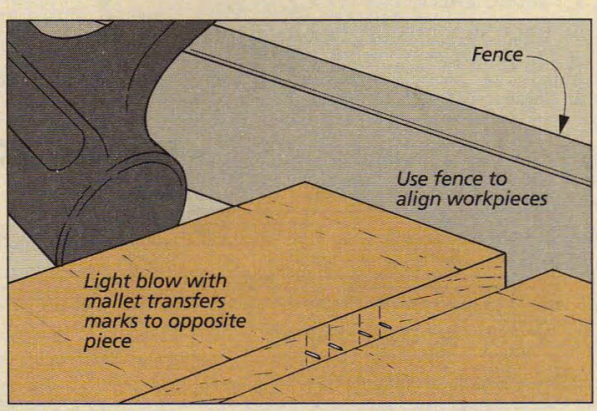

2 *To transfer the hole locations, drive four small brads into the holes made by the awl. After snipping off the heads of the brads, butt the workpieces together to mark the locations on the adjoining workpiece.*

When it comes to drilling the holes for the mortises, there are three things to look out for. First, the holes have to be drilled to the right depth. Second, they have to be lined up parallel with the face of the workpiece. And finally, they have to be drilled straight. In order to do this with a hand-held drill, I used a dowel jig.

DOWEL JIG. The dowel jig keeps the holes lined up and prevents the drill bit from wandering in the tough end grain of the workpiece. Shop Note: If you have a self-centering type of dowel jig, you'll need to place a spacer between the jig and your workpiece in order to drill off-center holes.

DRILLING THE HOLES. The waste is drilled out in two steps. Shallow holes are drilled at each end of the mortise first, see Step 3. Then a series of deeper holes are drilled in the center. (For the hinges used on the buffet, I used a 3/8"-dia. drill bit.)

The depth of the shallow end holes is important since they determine the position of the hinge once it's installed. (The hinge should sit just a hair below the surface.) Unfortunately, there isn't any way to test the fit until after the mortise is completed. But if you drill the end holes 1/4" deep, the hinge should sit at just the right height.

Shop Note: I wrapped a piece of masking tape around my drill bit to serve as a depth guide, see Step 3a. And once I had the tape positioned correctly, I drilled the end holes for *all* the mortises at this time.

The center section of the mortise is deeper than the ends to provide room for the main body of the hinge. This pocket is created by drilling three 1/2"-deep holes to remove the waste, see Step 4 and 4a.

Shop Note: The depth of these holes isn't as critical. Just make sure they are at least 1/2" deep.

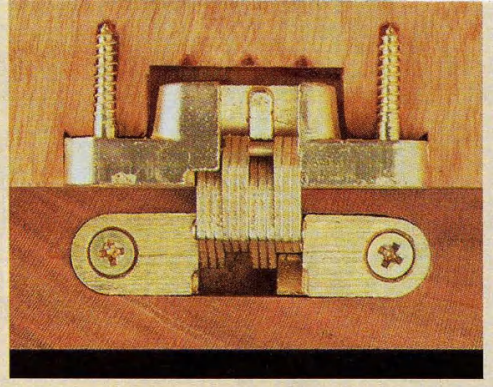

▲ *A Soss hinge is mortised into the edge of a workpiece. The mortise is deeper in the middle to accomodate the body of the hinge.*

Once all the holes are drilled, clean up the sides of the mortise with a chisel, see Step 5. Shop Note: To prevent splitting the thin wall of the mortise, I clamped the workpiece and a support board firmly in a vise.

Installing the hinges is simple — it's just a matter of inserting each leaf into a mortise and using the screwholes as a guide for drilling pilot holes. Then the mounting screws can be inserted, see Step 6. W

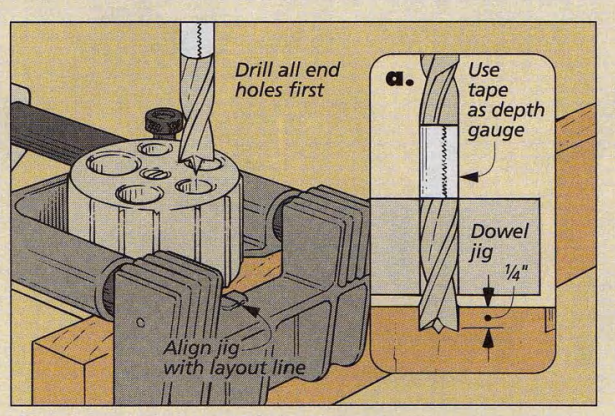

3 *Align the dowel jig with the first layout line. Then using a 3/8"-dia. brad-point bit, drill a 1/4"-deep hole. Drill all the end holes for all hinges before readjusting the masking tape depth gauge.*

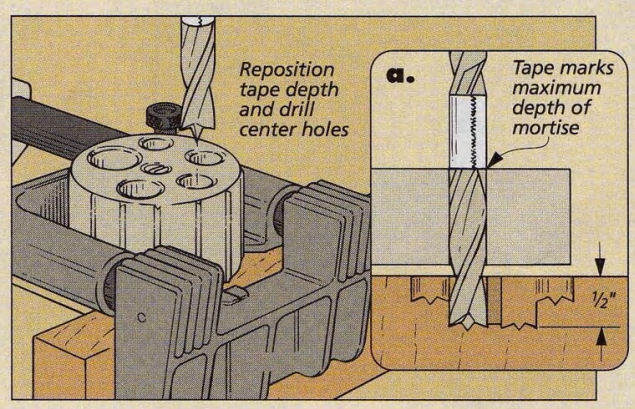

4 *After drilling the end holes in all the pieces, reposition the tape depth stop to drill a 1/2"-deep hole. Then drill out the waste in the center of the mortises, again using the layout lines to align the dowel jig.*

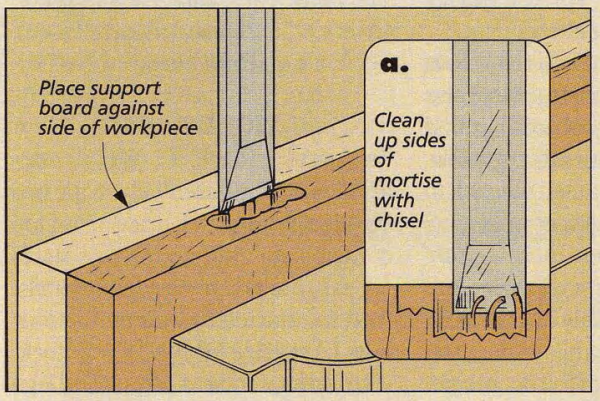

5 *After drilling all the holes, the mortise can be cleaned up with a chisel. To prevent splitting the thin sidewall of the mortise, clamp a scrap piece to the side of the workpiece for additional support.*

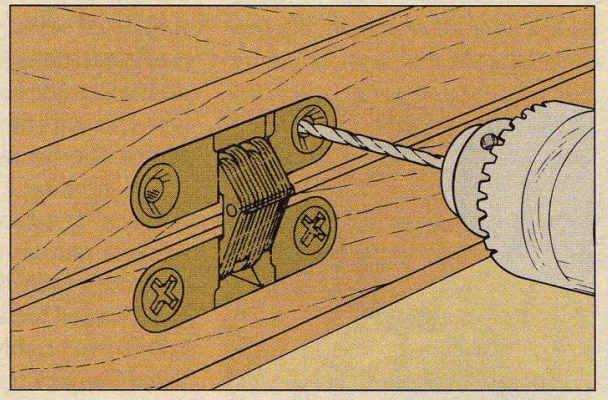

6 *To install the mounting screws (#5 x 3/4"), place the hinge in the mortise and drill pilot holes, using the hinge itself as a guide. Be careful not to overtighten the screws or the threads will strip out the end grain.*

WEEKEND PROJECT

MAGAZINE RACK

This rack will keep your magazines neat and right at hand. Plus, you can build it over a weekend.

Magazine racks are typically built for practical reasons — not to show off decorative joinery or fancy woods. And this rack is no different. I wanted a place to keep magazines neat and close at hand. But I also wanted the design to be simple enough so the rack could be easily completed over a weekend.

▲ *The two frames of this magazine rack simply slide together with half lap joints. These half laps are cut easily on the table saw before the frames are assembled.*

DESIGN FEATURES. But besides a clean design and simple construction, I also had a couple other features in mind to make the rack as useful as possible.

For one thing, I wanted the rack to be "open," so you could see what magazines or catalogs were there — without having to dig through a pile. And I also wanted to be able to grab magazines comfortably while sitting, so I "lifted" the rack up off the floor to put them within easy reach.

To achieve these features without becoming too complicated, the X-shaped rack consists of two identical, interlocking frames, see the photo below left. Each of these frames is built with basic mortise and tenon joinery, which creates a sturdy assembly that's quick to build.

LEGS & RAILS

As I just mentioned, to build this magazine rack, you essentially make two identical frames, see drawing on top of next page. And each frame starts out as two legs connected by two rails.

LEGS. I started by cutting the four **legs (A)** to size from ¾"-thick stock, see drawing on next page. (The legs are 1¼" wide and 26⅛" long.)

As I mentioned, the legs and rails will be joined with mortise and tenons. I usually find it easiest to cut the mor-

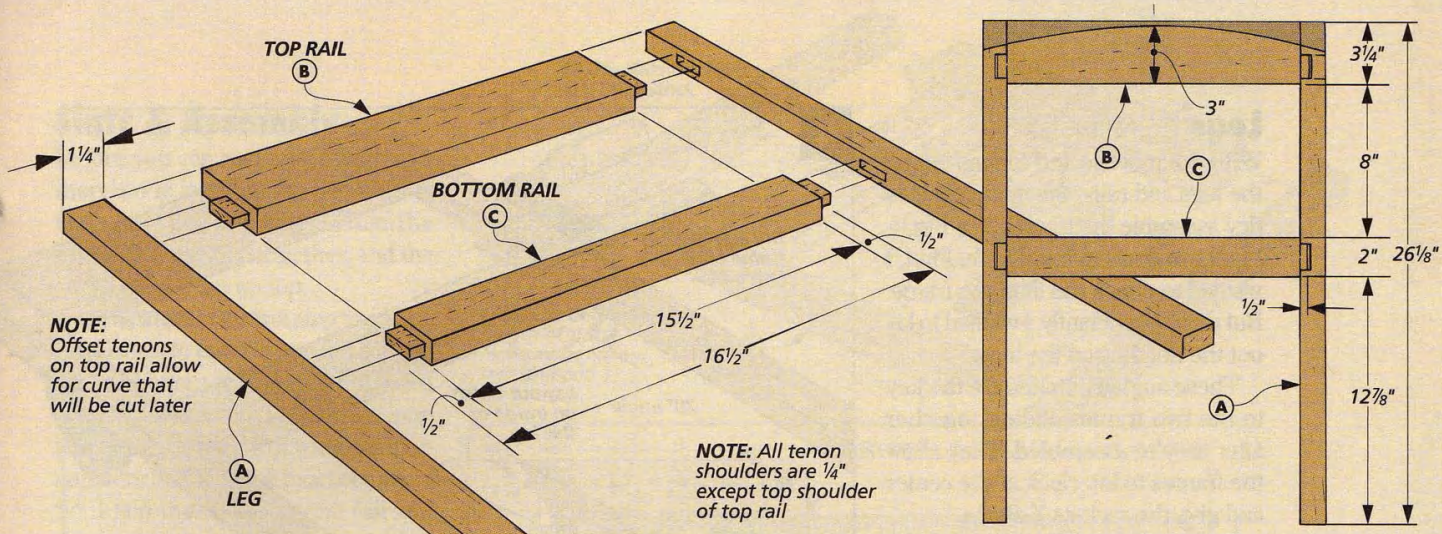

tises first and then size the tenons to fit. So the first thing to do is lay out the mortises on the legs.

The thing that's a bit odd here is the mortises on each leg aren't the same size. The reason for this is simple. The tenon on the top rail is offset, refer to the drawing above. This way, there will be plenty of room to cut the curve along the top edge of the frame — without exposing the tenon.

To cut the mortises, start by clamping a fence to the drill press table. Then drill a series of ¼"-dia., overlapping holes, see Fig. 1.

Shop Tip: When drilling mortises, I always set the bit to drill the mortises slightly deeper than the length of the tenons. (My mortises were drilled 9/16" deep.) This extra 1/16" creates some room for excess glue.

After the mortises are drilled, there's a little hand work to do. The sides of the mortises need to be cleaned up with a chisel, see Fig. 2. And the ends of the mortises need to be squared up to accept the tenons.

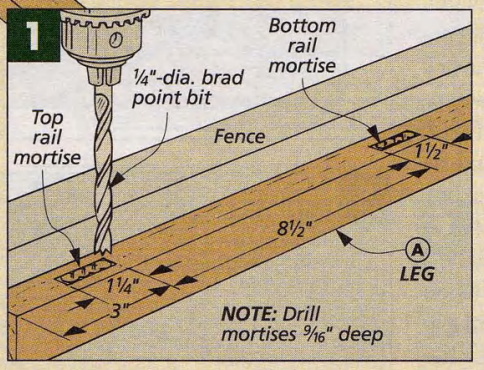

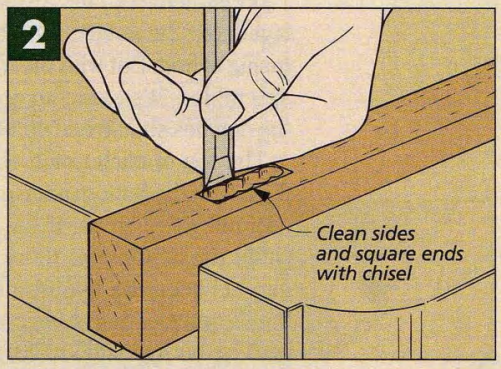

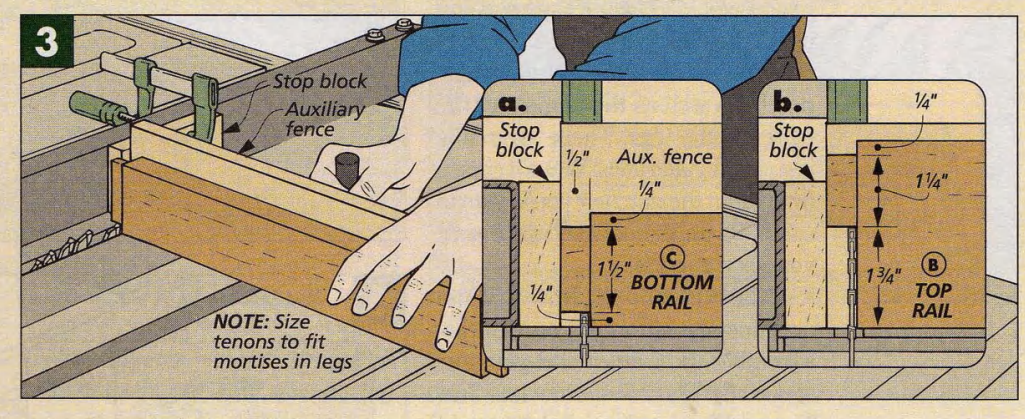

RAILS. With the mortises on the legs complete, work can begin on the **top (B)** and **bottom rails (C)**, see drawing above. Both are cut to finished length (16½"), and the bottom rail is cut to finished width (2"). The only difference is the top rail starts off extra wide (3¼"). This allows for the curve on the top edge.

Once the rails are cut to size, the next step is to cut the ½"-long tenons on the ends of the rails, see Fig. 3. To do this, I used the table saw and made a series of passes over the saw blade. To make sure the shoulders of each tenon align, I clamped a short block to the rip fence to act as a stop.

The important thing is to size the tenons on the rails to fit the mortises in the legs. Almost all the shoulders here are the same. (Mine were ¼", see Fig. 3a.) The only exception is the top shoulder on each top rail. To offset these shoulders, I simply raised the saw blade 1¾" high, see Fig. 3b.

CUTTING DIAGRAM

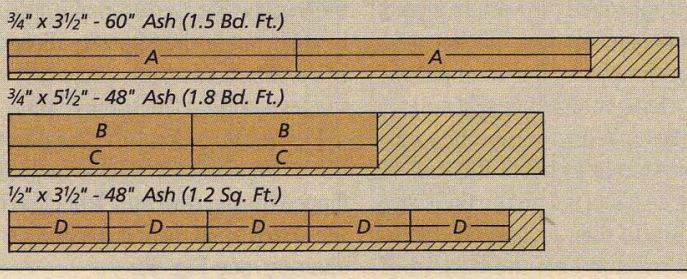

MATERIALS

A	Legs (4)	¾ x 1¼ - 26⅛
B	Top Rails (2)	¾ x 3¼ - 16½
C	Btm. Rails (2)	¾ x 2 - 16½
D	Slats (10)	½ x 1½ - 9

Legs CONTINUED

With the mortise and tenons cut on the legs and rails, the next step is to dry assemble the frames, see Fig. 4. I had two goals in mind here. First, I wanted to check the fit of the frame. But more importantly, I wanted to lay out the notches on the legs.

These angled notches are the key to the two frames sliding together after they're assembled. They allow the frames to interlock at the center and give the rack its X-shape.

LAY OUT NOTCHES. I have to admit that laying out the notches was a bit confusing at first. But with the frame dry assembled, it's easier to see where the notches should end up, see Fig. 4.

The top of each notch should be flush with the bottom edge of the bottom rail, see Fig. 4a. If the notch is *below* the bottom rail, there will be a gap between the two frames when they're put together. A very slight gap is okay, but if it's too wide, then the magazines will slide through and end up on the floor.

Next, I laid out the bottom of the notch, as well as the angles on the edges of the legs. These are really just rough guide lines. When it comes time to cut the notches, you'll want to sneak up on the cut and make sure you get a good fit.

CUTTING THE NOTCHES. Now that the notches are laid out, you can disassemble the frames and get your saw ready. There's not much to this. The miter gauge is angled 20°, and I added an auxiliary fence that extends across the blade. This not only provides better support. It also reduces the chance that the back edge of the notch will chip out.

All that's left now is to set the height of the blade. Since these notches are really just angled half laps, the height of the blade should equal half the width of the legs (5/8" in my case).

Shop Tip: If you accidentally cut the notches too deep, you can place a thin shim inside the notch between the two legs. After assembly, the shim won't be visible.

To cut the notches, I started near the top layout line, sneaking up on (but leaving) the line. Then make multiple passes over the saw blade until you approach the bottom layout line. When you get near this line, test the fit of the pieces between passes until the legs fit together just snug.

BEVEL ENDS. With the notches cut, the next step is to bevel the end of each leg so it sits flat on the floor, see Fig. 6. To do this, I tilted the blade 35° and trimmed off the bottom of the leg, see Fig. 6a. Just make sure the bevel is cut in the opposite direction as the notch. Also, use a stop block so the legs end up the same length.

Finally, to make sure the point of the bevel won't snag and break off, I flipped the leg over and "knocked off" the sharp tip of the leg, creating a 1/8" chamfer, see Fig. 6b.

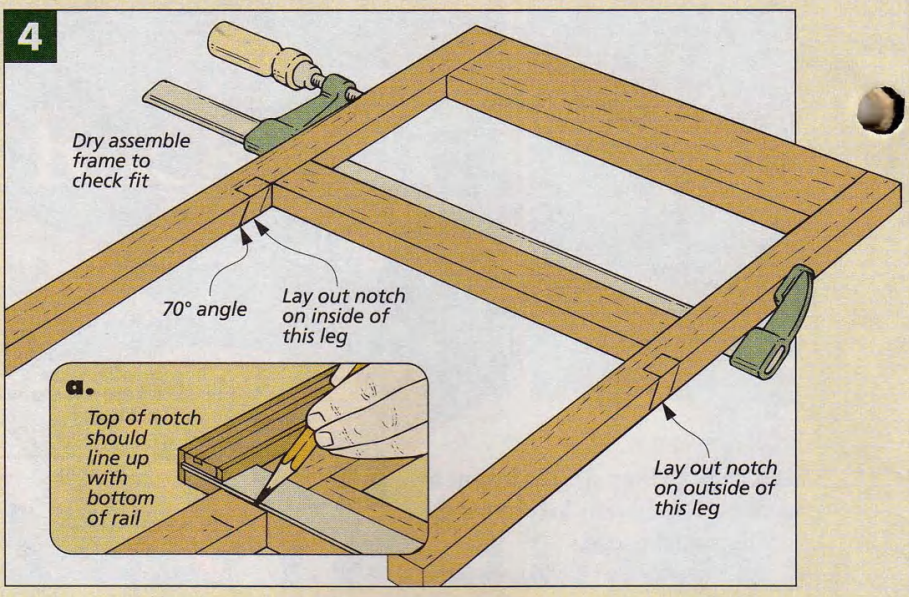

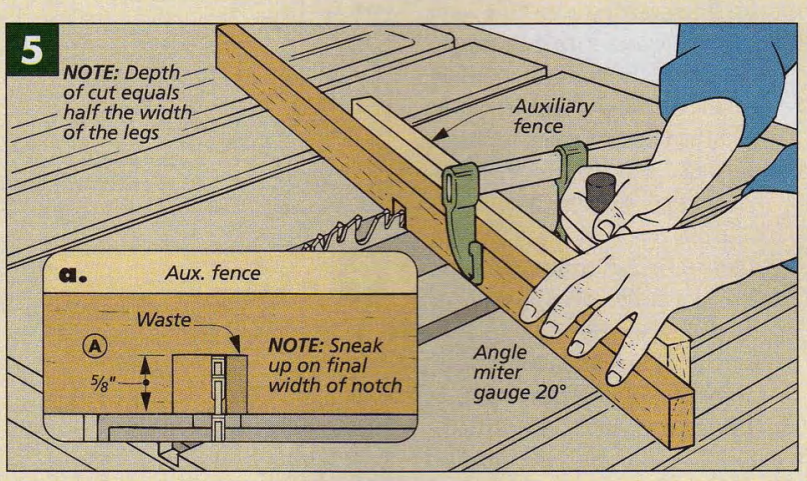

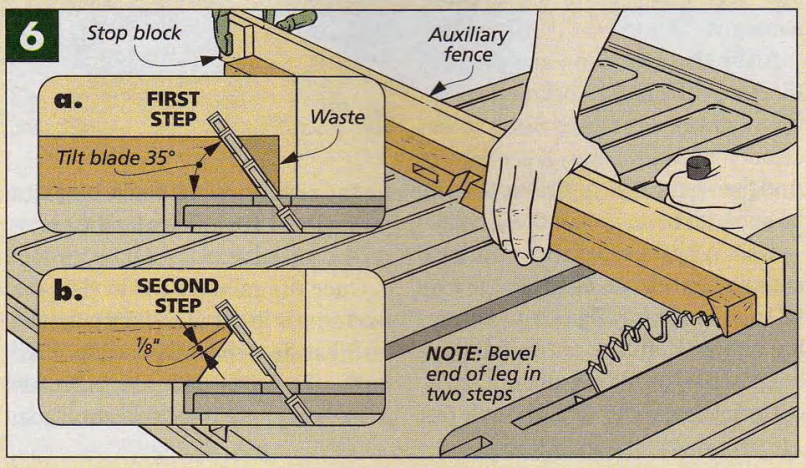

Slats & Assembly

Before you can assemble the frame, there's one last thing to do: add the slats between the rails. Then the frame can be glued together, and the curve can be cut on top.

CUT MORTISES. The first step to adding the slats is to cut the mortises in the top and bottom rails. As before, I used the drill press and cleaned up the mortises with a chisel. But what's important here is that all the mortises align. So, I laid them out on one rail and then transferred the lines with a square, see Fig. 7.

MAKE SLATS. With the mortises cut, I made the **slats (D)**, see drawing above right. These pieces are ½" thick and 1½" wide. The length of the slats depends on the distance between the rails. So I dry assembled a frame to measure the distance between the rails. This equals the shoulder-to-shoulder length of the slats. Then I simply cut them 1" longer for the ½"-long tenons. (My slats were 9" long.)

The next step is to cut tenons on both ends of each slat, see Figs. 8 and 8a. Here again, I used a stop block clamped to the rip fence to establish the length of the tenons.

CREATE ARCS. After the tenons are cut, the frames can be glued together. Then when the glue is dry, all that's left is to create the arc on the top of each frame, see Fig. 9.

To do this, I drove a brad on each side of the frame. Then I bent a piece of ⅛" hardboard between the two nails so the rail was 3" wide at the center, see Fig. 9a.

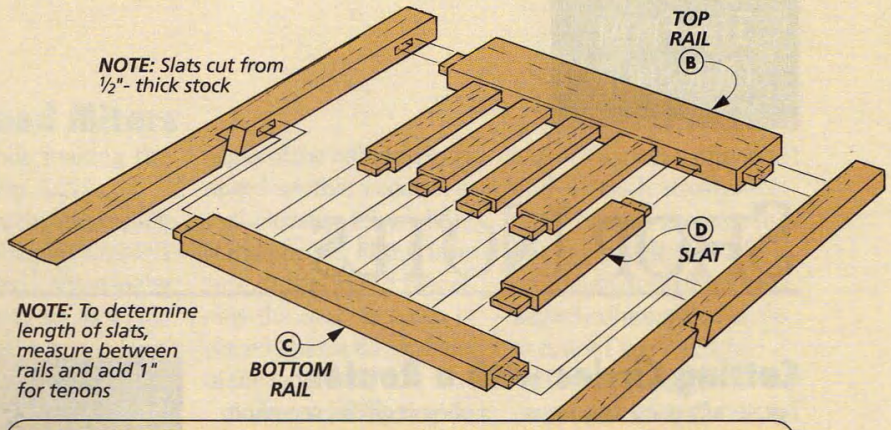

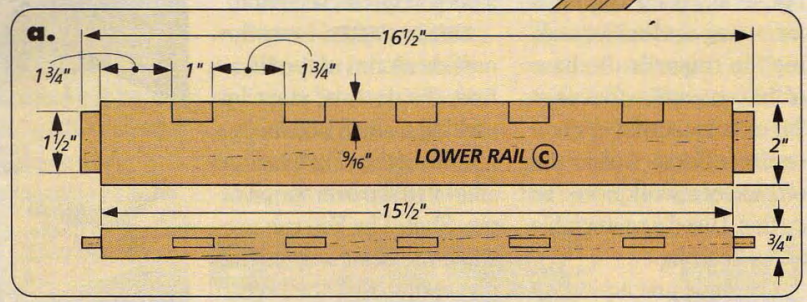

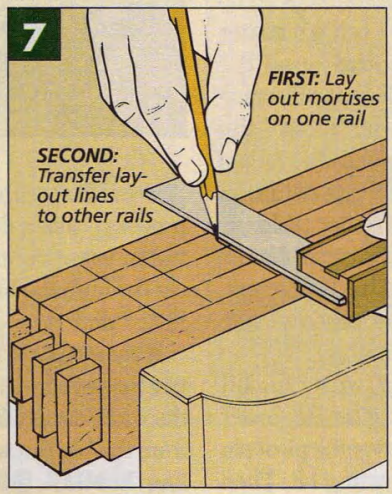

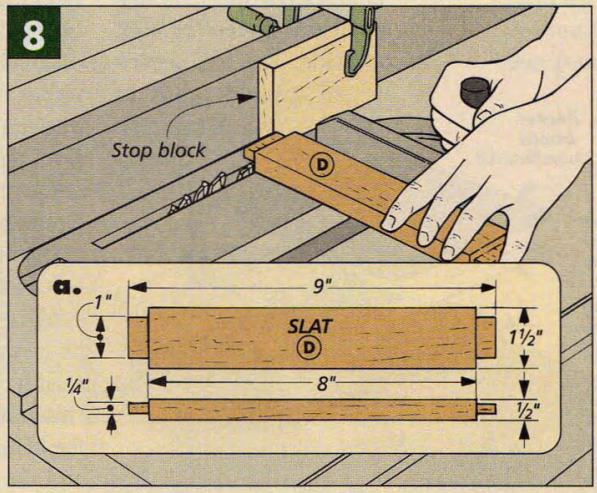

With the arcs laid out, I roughed them out with the band saw, staying 1/16" on the waste side of the line. Then I sanded up to the line.

Finally, before sliding the two frames together, I used a ½" round-over bit to rout a bullnose profile along the top edges, see Fig. 10. W

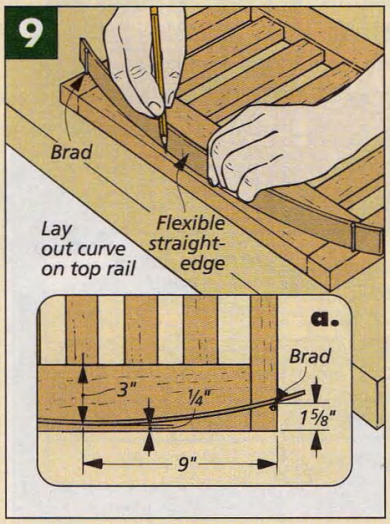

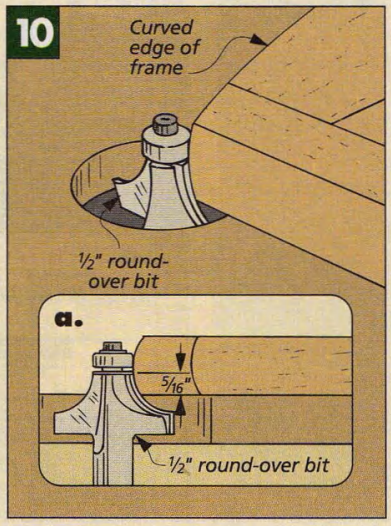

SHOP NOTES

Cutting Circles with a Router

I generally use a band saw for cutting circles. But making the rings for the base of the centerpiece (see page 24) calls for cutting a circle on the *inside* as well as the outside of a workpiece. To do this, I used a router table and a basic jig.

The jig is just a piece of 1/4"-thick hardboard with a small nail driven through one side. The nail serves as a pivot point to guide the ring blanks in a perfect circle, see photo.

OUTSIDE CIRCLES. I cut the outside circles of the rings first. To do this, start by making a small hole in the middle of the ring blank to allow it to slip over the pivot pin. Shop Tip: You can use a nail the same size as the pivot pin to drill the hole.

The next step is to set up the jig. This is just a matter of placing the jig on the router table so the distance between the bit and the pivot pin equals the radius of the ring. Then clamp the jig to your router table.

(Since the outer diameter of each ring is different, you'll have to reposition the jig for each ring.)

Starting with the bit raised about an 1/8", lower the blank over the pivot pin and the rotating bit. Then turn the blank counterclockwise, making a complete revolution.

Now just repeat the process, raising the bit between passes until you've cut through the blank, see Figs. 1 and 1a.

INSIDE CIRCLES. When cutting the outside of the rings, the waste simply falls away from the bit. But when cutting the inside, the waste is trapped. This means there's a danger of kickback.

To avoid this, I carpet-taped the blank to a backer board before routing the ring, see drawing at left.

The backer board holds both the ring and the waste securely even after making the final router pass, see Figs. 2 and 2a.

Shop Note: Just make sure you don't rout all the way through the backer board when making the final router pass.

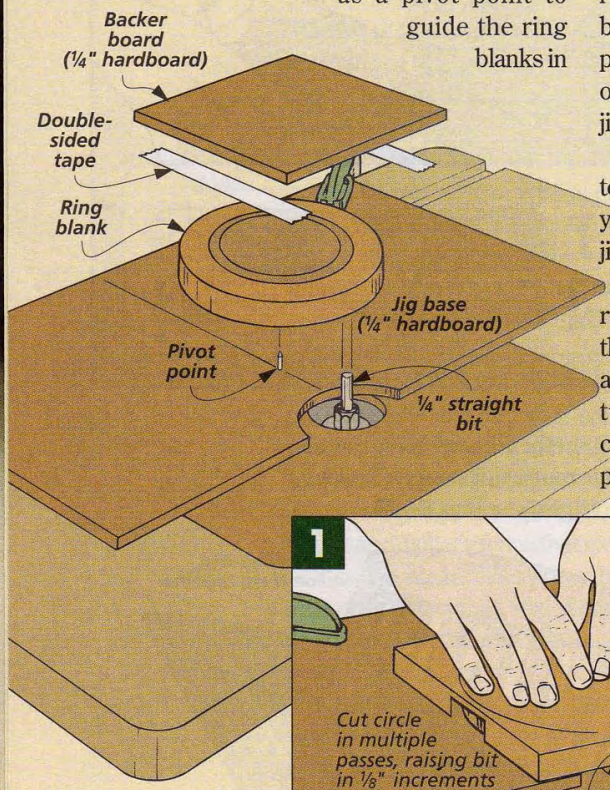

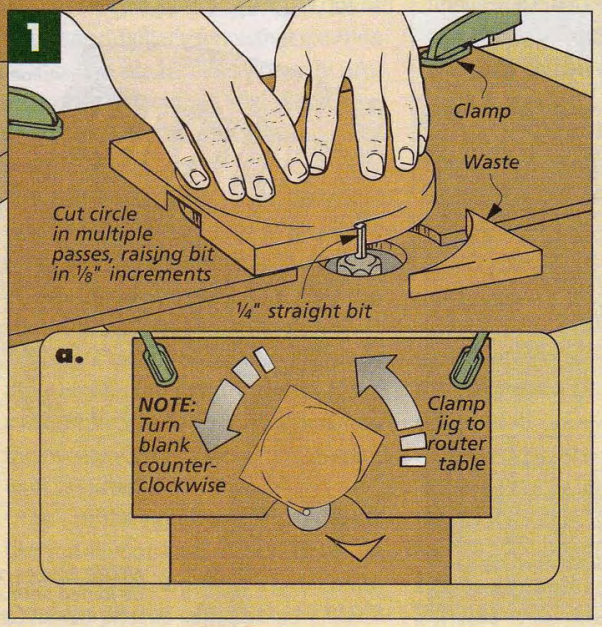

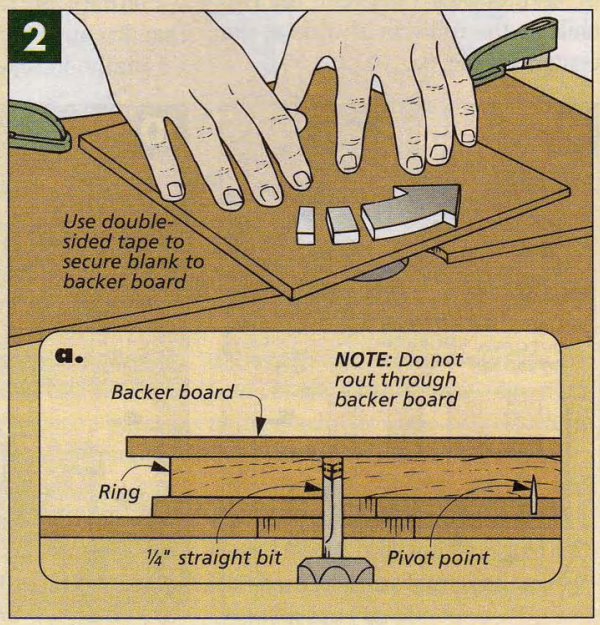

Cutting Grooves for Splined Miters

Cutting a groove in the end of a workpiece for a splined miter joint is usually just a matter of making a couple passes over the table saw, while flipping the piece between each pass to center the groove.

But cutting the grooves on the ends of the door frame pieces of the buffet server (see page 6) is a different story. For starters, I was concerned about keeping the mitered pieces steady while making the cuts, see Fig. 1.

Fortunately, the solution to this problem is simple. I just clamped a scrap to the workpiece to act as a runner. (I used a wood clamp pad to avoid damaging the bead molding.)

And to prevent chipout as the blade exits the workpiece, I clamped a mitered scrap block to the runner, *behind* the workpiece.

The bead molding on the edges of the mtiered pieces raised another concern as well. Because this molding stands proud of the front face of the frame pieces, only the back face can be placed against the rip fence of the table saw.

So instead of flipping the workpiece between passes, you'll have to reposition the rip fence. So start by making a single pass on all the ends of the frame pieces.

Shop Note: In order to cut a groove on the opposite end of each workpiece, you'll have to unclamp the backer block and flip it around so the workpiece is angled in the opposite direction, see Figs. 2 and 2a.

After making the initial pass on all the ends, reposition the fence to sneak up on the final width of the groove, see Fig. 1a. Then once you have the fence set and locked, finish cutting the rest of the grooves. W

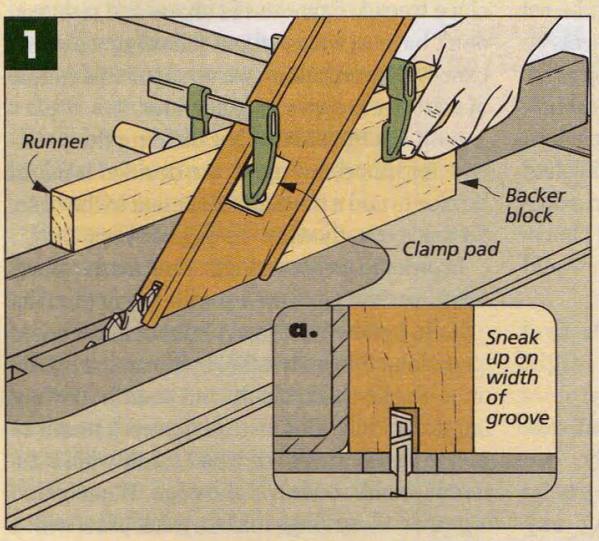

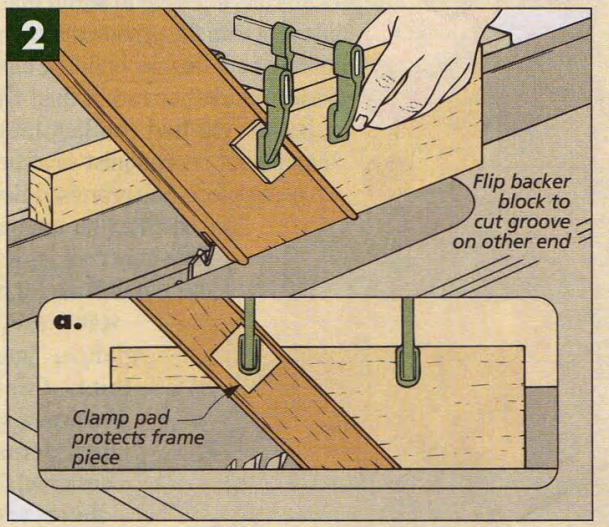

▲ *Splines add extra strength to a mitered door frame.*

Trimming Plywood Edging Flush

After the edging was glued to the plywood side panels of the buffet server (see page 6), it needed to be trimmed flush. To do this, I used a router with a flush trim bit. But this presented a couple of problems.

First, it's difficult to balance the base of the router on the narrow edge of the workpiece. As a result, it's easy to gouge the edging.

Second, the bearing on the router bit drops into the dadoes cut on the face of the side panels — which can also gouge the edging.

Fortunately, both problems are easy to solve. To bridge the gap created by the dado, all that's needed is a filler strip, see Fig. 1. Cut the strip so it fits snug in the dado and is flush with the face of the plywood.

To create a wider surface for the router to ride along, just clamp the sides together with a 2x4 spacer sandwiched in between. The spacer separates the sides so you can rout the edging on both sides at one time.

One thing to keep in mind is the routing direction. The bit may grab the workpiece if you rout in the wrong direction, see Fig. 2.

Finally, the edging can be trimmed to length. I use a chisel and carefully pare away the excess on the ends, see Fig. 3. W

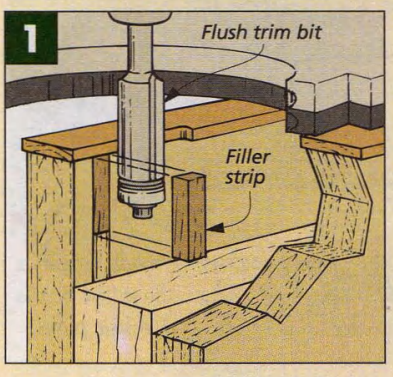

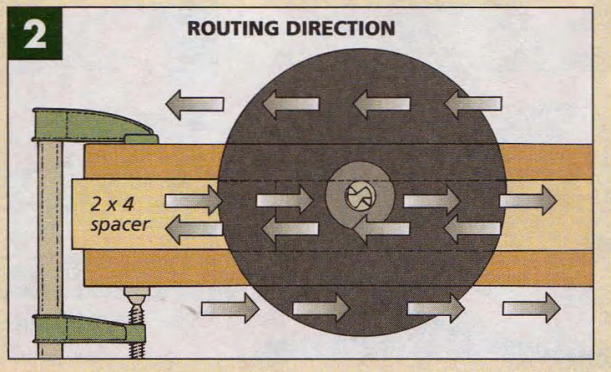

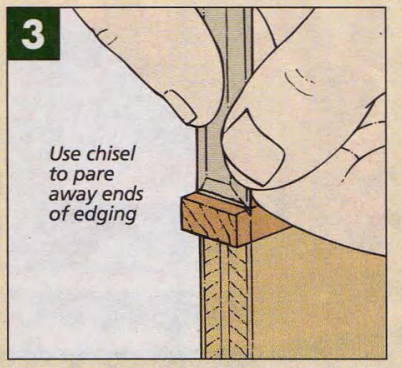

HOLIDAY CENTERPIECE

This seasonal project is as much fun to make as it is to display. And for even more excitement, add a music box movement.

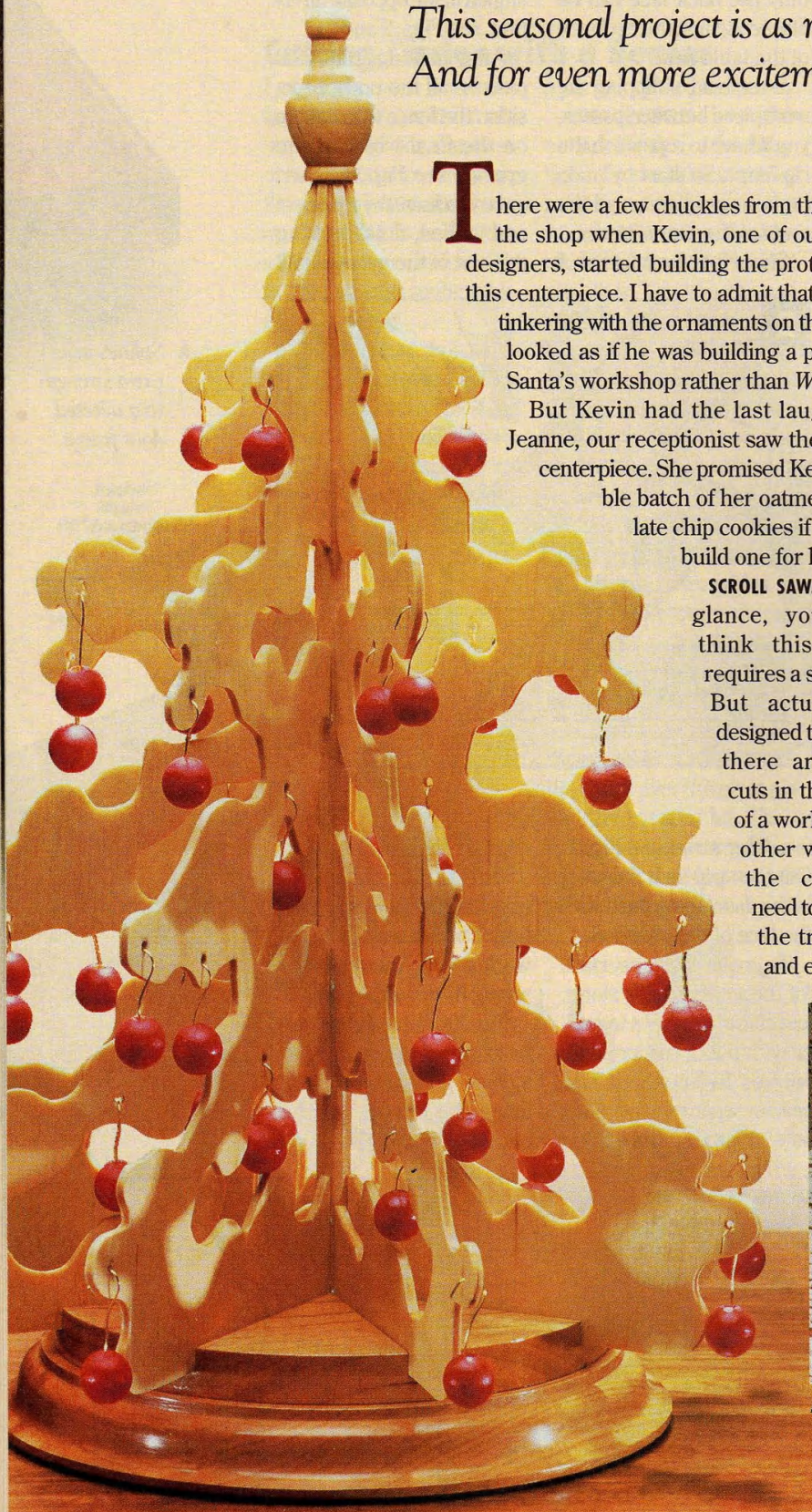

There were a few chuckles from the guys in the shop when Kevin, one of our project designers, started building the prototype for this centerpiece. I have to admit that as he sat tinkering with the ornaments on the tree, he looked as if he was building a project for Santa's workshop rather than *Woodsmith*.

But Kevin had the last laugh when Jeanne, our receptionist saw the finished centerpiece. She promised Kevin a double batch of her oatmeal chocolate chip cookies if he would build one for her.

SCROLL SAW. At first glance, you might think this project requires a scroll saw. But actually, we designed the tree so there aren't any cuts in the middle of a workpiece. In other words, all the cuts you need to make for the tree begin and end on the edge of the workpiece. This means that you can use a scroll saw, a band saw, or even a coping saw to cut out the pieces of the tree. And since trees are random in shape and size, you don't have to worry about following a pattern exactly. Nevertheless, we've supplied a couple of patterns to serve as guidelines.

MUSIC BOX MOVEMENT. After building the prototype for this centerpiece, we decided it might be nice to add a musical movement to the base. So that's exactly what we did, see page 28.

In order to create enough space for the movement, we had to come up with a way to make a thick, hollow base, see photo below. I could have done this on a lathe, by turning a profile on a single, thick blank, and then hollowing out the middle. But instead, I used a router to create three "rings" of wood, each with a different profile routed on the edge. When glued together, these rings make a thick base, with a hole in the middle for the movement. For more on making these rings, see page 22.

TREE. Whether you plan to build the standard base or the musical version, the tree is exactly the same. Essentially, it's made up of eight "branches" and a "trunk" that fit into a round platform. I began with the branches.

▲ *An optional base for the centerpiece can be made to hold a music box movement, see page 28. When the music box is wound up, the tree revolves slowly while the music plays.*

Instead of making all the branches identical, I used two patterns (four of each). The goal here is to give the tree a little variety. But by cutting all four branches of the same pattern at once, I also saved some time.

The branches are made out of 1/8"-thick Baltic birch plywood. (Baltic birch is available at some hobby stores and through mail order, see page 35 for sources.) I cut four blanks for the branches, making them large enough to fit two branches on each blank. Then I taped the blanks together with carpet tape, see Fig 1.

To lay out the branch patterns, start by enlarging the patterns at right by 200%. Then after cutting out each pattern affix them to the top blank using a spray adhesive or rubber cement. (You'll have to place one of the patterns face down in order to get them both on the same blank.)

DRILLING HOLES. Before beginning to cut the branches out, I drilled the 1/8" holes that will be used to hang the ornaments once the centerpiece is completed, see Fig. 2. Note that there are five holes on the first pattern and seven on the second.

CUTTING OUT THE BRANCHES. With the holes for the ornaments drilled, the branches can be cut out, see Fig. 3. Just follow the outlines of the pattern to remove the waste areas.

Once all the waste areas have been cut away, remove the tape and separate the branches. Now you're ready to start making the trunk and platform that holds the branches.

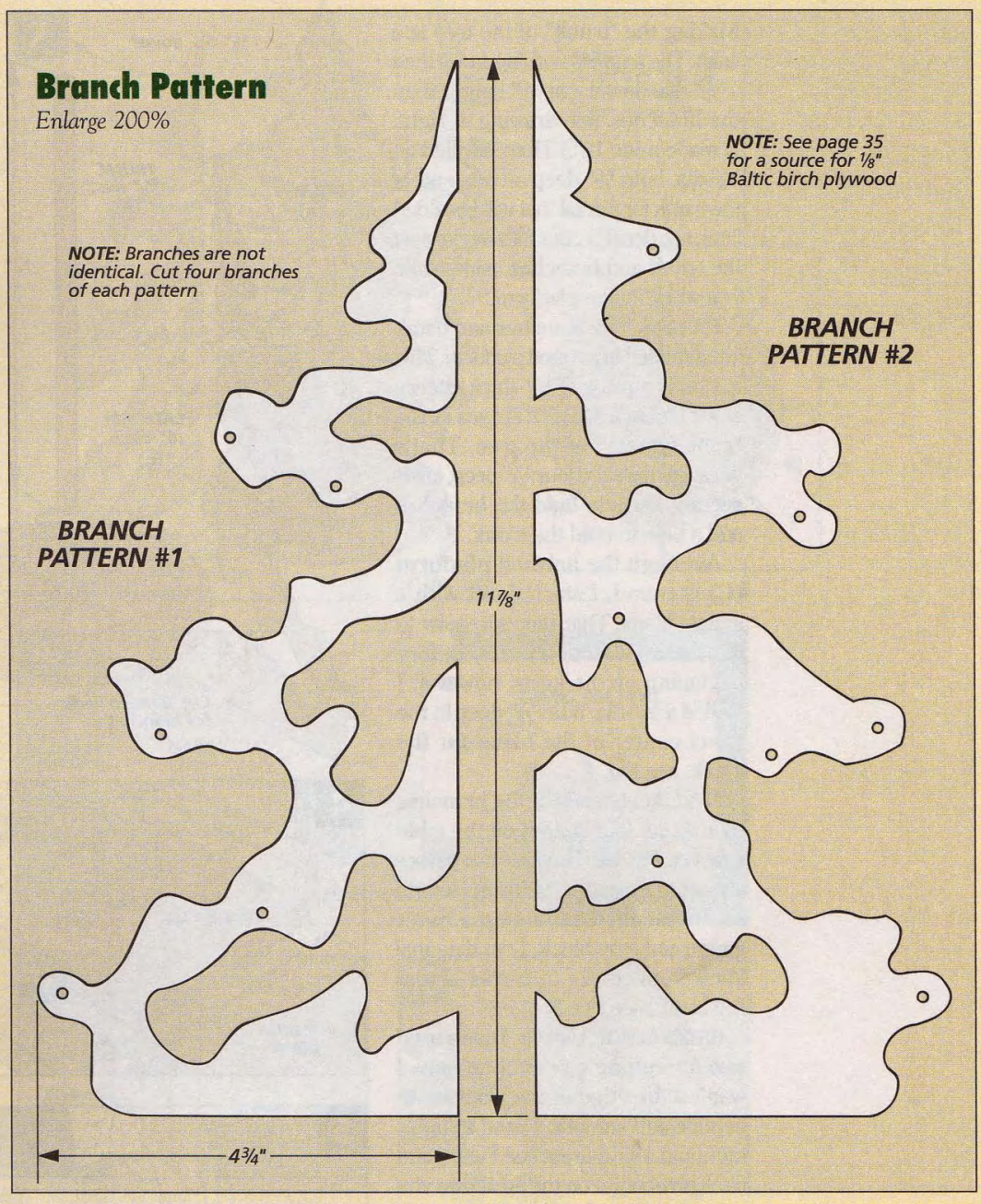

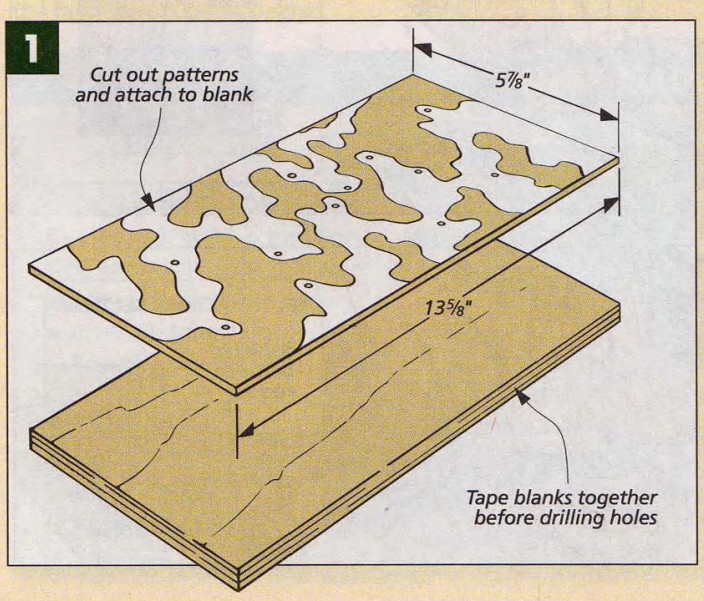

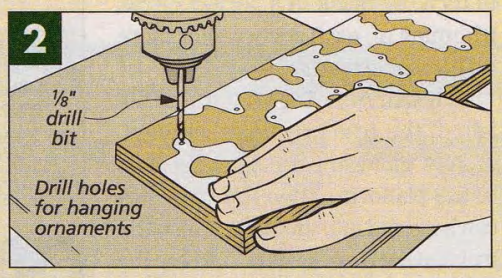

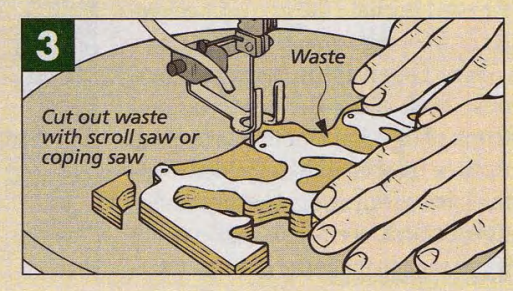

Making the "trunk" of the tree is a snap. The trunk is nothing more than a 3/8"-dia. dowel, cut 1/8" longer than the branches, see drawing at right. (I made mine 12".) Then I drilled an 1/8"-dia. hole 1/2" deep on one end of the trunk for a finial that will be added later, see detail 'a'. But for now, just set the trunk and branches aside while you work on the platform.

PLATFORM. The branches and trunk are mounted in a round platform. This is simply a piece of 1/2"-thick cherry stock and in a sense, it serves as the "root system" of the tree. That's because there are four 1/4"-deep, intersecting kerfs to hold the branches and a hole to hold the trunk.

Although the finished **platform (C)** is round, I started out with a square blank. This makes it easier to cut the intersecting kerfs. Before beginning on the kerfs, however, I drilled a 3/8"-dia. hole 3/8" deep in the exact center of the blank for the trunk, see Fig. 4.

Next, I cut kerfs for the branches by making four passes on the table saw, see Fig. 5a. The first two passes are centered on the width and length of the blank. Then using a miter gauge and stop block, I cut diagonal kerfs from corner to corner across the blank, see Fig. 5.

CUTTING A CIRCLE. Usually, I use a band saw for cutting circles. But since I wanted the edge of the platform to be nice and smooth, I used a router table and a simple jig, see Figs. 6 and 6a. A pivot point on the jig allows you to turn the blank in a perfect circle, trimming off each corner. (For more on this, see page 22.)

ASSEMBLY. After the platform is finished, the tree can be assembled. Start by gluing the trunk into the hole in the platform. Then the branches can be glued into the kerfs and to the trunk of the tree, see Fig. 7. Just make sure to alternate the two branch patterns as you go along, see Fig. 7a.

BASE. The platform serves its purpose by holding the branches and trunk of the tree. But to "spruce" up the tree (pun intended) I added a 3/4"-thick base with an ogee profile under the platform, see Fig. 7. (Shop Note: If you want to make the optional musi-

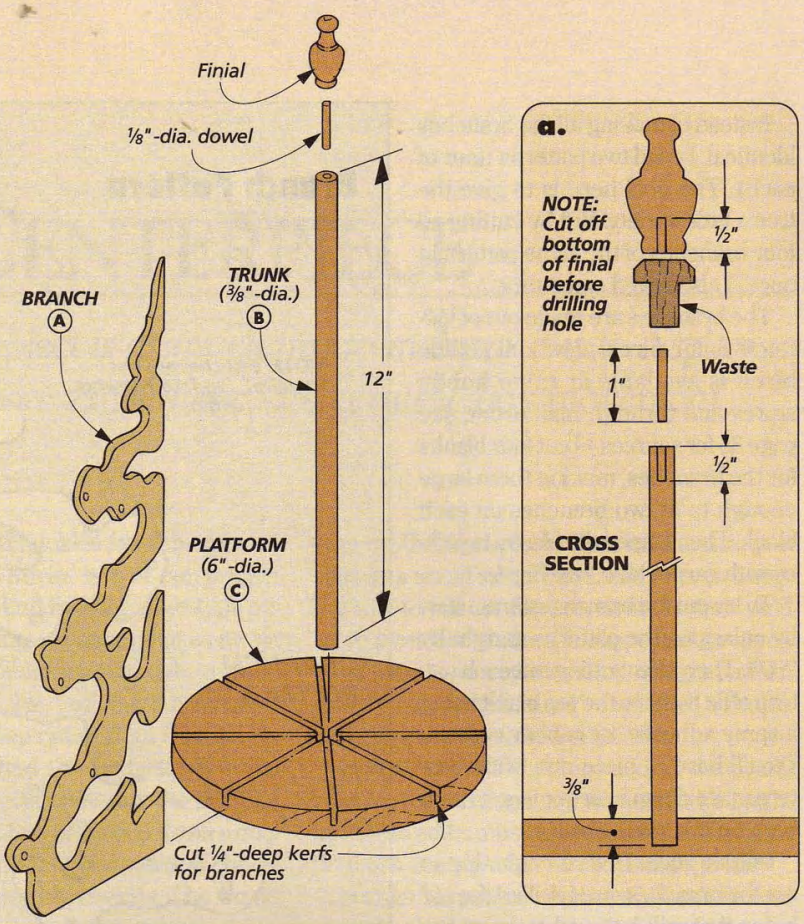

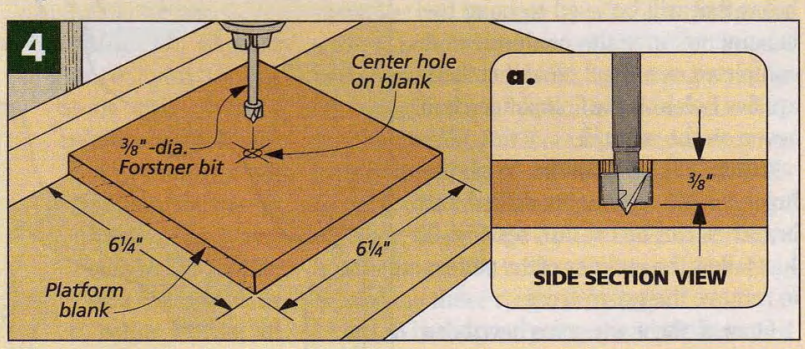

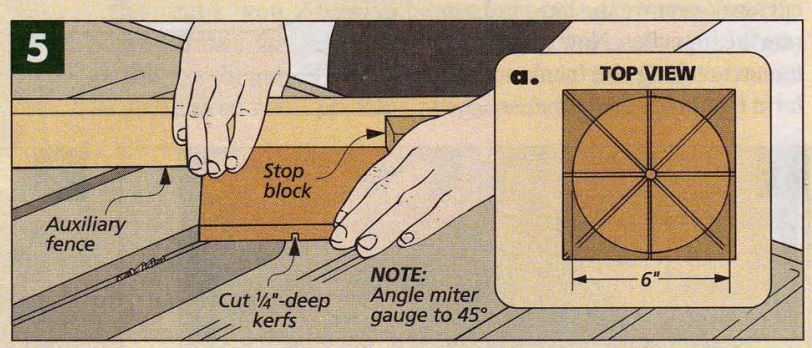

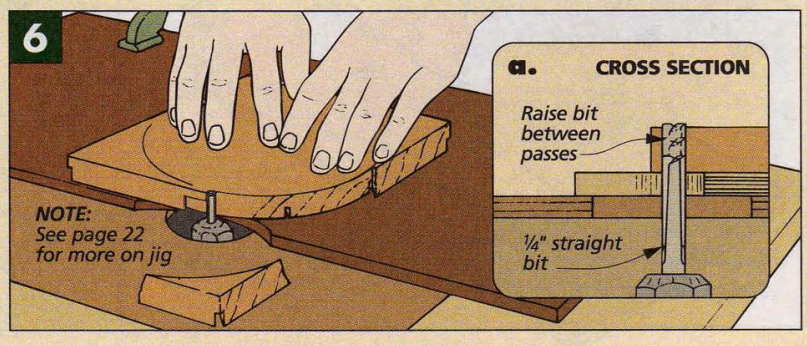

cal base instead, see the instructions starting on page 28.)

Like the platform, the **base (D)** also starts off as a square cherry blank (7½" x 7½"). But after cutting it to it's round shape on the router table, I routed an ogee profile around the edge, see Figs. 8 and 8a.

Once you've finished routing the ogee profile, the base can be glued to the platform. To help keep the two pieces aligned while gluing them up, I drove some small brads partially into the base and snipped their heads off so that about ⅛" of the brad remained, see Fig. 7. The brads prevent the tree and platform from sliding out of position as the pieces are being glued up.

FINIAL. No tree is complete without a decoration of some kind at the top. In this case, I used a store-bought finial. Shop Note: I couldn't find a finial in the size I wanted, so I bought a larger one and cut it down to 1⅞".

To attach the finial, I marked the bottom with a scratch awl, see Fig. 9. Then I drilled an ⅛"-dia. hole ½" deep in the bottom of the finial, see Fig. 10. Now the finial can be glued to the top of the trunk, using an ⅛" dowel to strengthen the joint, see drawing at top of page 26.

FINISH. Wiping or brushing a finish on this project presents a bit of a challenge because of the branches. So instead, I finished it with a spray lacquer (Deft). Then I added some felt pads to the bottom of the base and made some ornaments to hang on the branches, see box below.

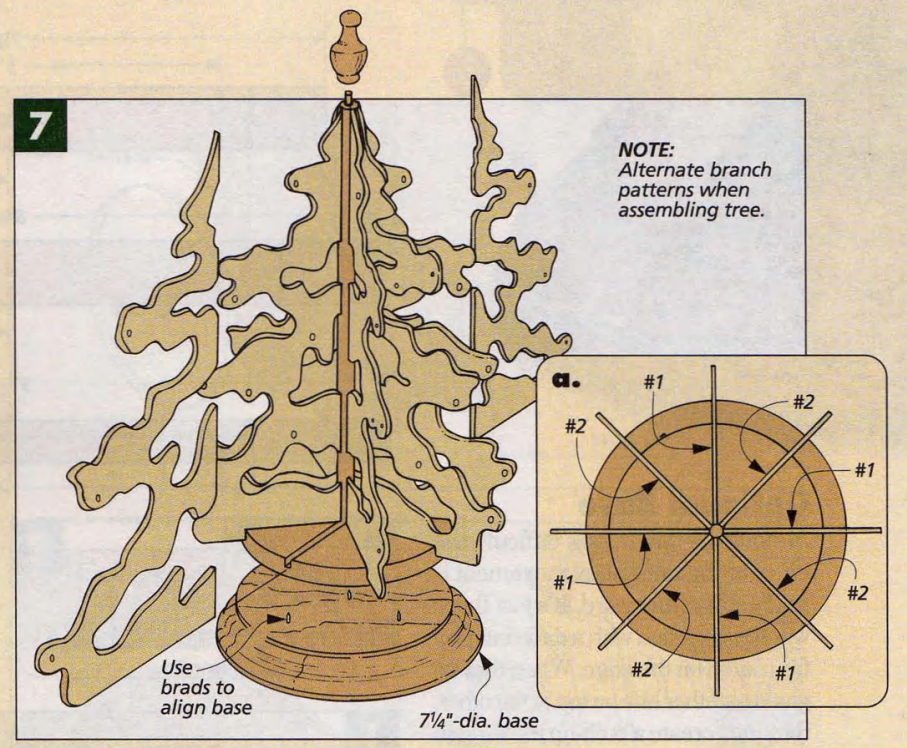

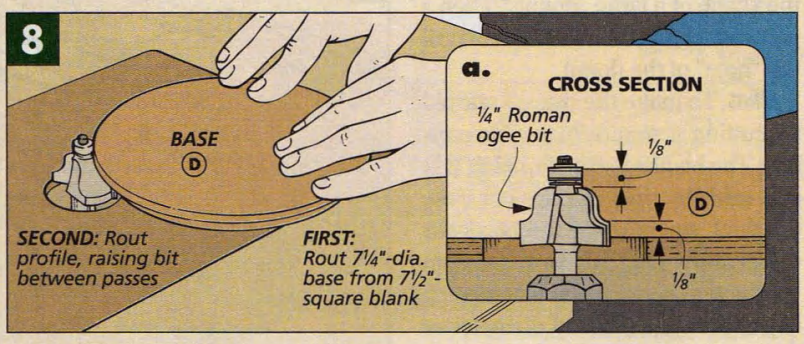

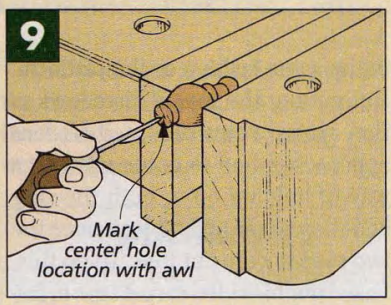

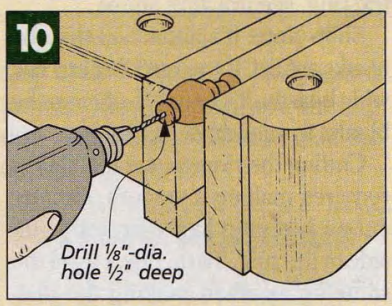

SHOP-MADE ORNAMENTS

To make ornaments for the tree, I simply used some brass wire and wood beads (available at craft or hobby stores, or see sources on page 35).

First the beads are painted, see Step 1. Then the wire is cut and bent into long 'S'-shaped hooks, see Step 2. Finally, the hooks are glued into the holes in the beads, see Step 3.

1 *The beads are painted with a spray enamel. Stringing the beads on a dowel first makes it easier to paint them.*

2 *To make the hooks for the ornaments, simply cut the wire into 2"-long pieces and bend them into shape.*

3 *A small bend at the end of the wire wedges into the hole in the bead. Then a drop of glue holds the wire in place.*

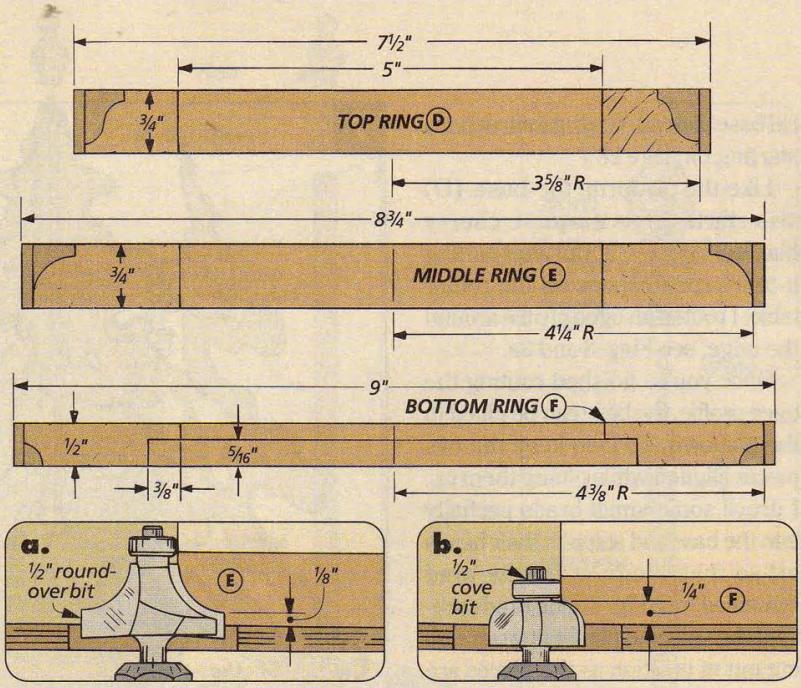

Optional Base

Although it might look difficult, the base for the music box movement is really straightforward. It's just three wood rings, each with a different profile routed on the edge. When they're glued together one on top of the other, the rings create a built-up molding in the shape of a large "donut." Then a plywood bottom is added to conceal the "hole" of the donut.

RINGS. To make the rings, I started by cutting a square blank for each one. The blanks for the **top ring (D)** and **middle ring (E)** are cut from ¾"-thick stock, while the blank for the **bottom ring (F)** is made from ½"-thick material. Each blank is ¼" larger than the finished diameter of the ring, see drawing above.

Shop Note: It's important that the blanks are flat. If you can't find any flat, wide boards, it's better to glue up the blanks from narrow stock.

Cutting the rings out of the blanks requires making a smooth, circular cut on both the inside and the outside of the ring. To do this, I used the same jig as when making the platform. (For more on this, see page 22.)

The outside of each ring is routed in the same fashion as the platform. But cutting the inside diameters of the rings required a different approach. I had to come up with a way of holding on to both the ring and the center of the blank once the two pieces were cut free. To do this, I used double-sided carpet tape to fasten a backer board to the top of the blank to keep the pieces together, see Fig. 1. Shop Note: When cutting the ring free, make sure you don't cut all the way through the backer board.

PROFILES. After cutting the three rings, the *outside* edge of each is routed with a different profile. This way, when the rings are glued together, they will create a built-up molding.

A Roman ogee profile is routed on the top ring, see Fig. 8a on page 27.

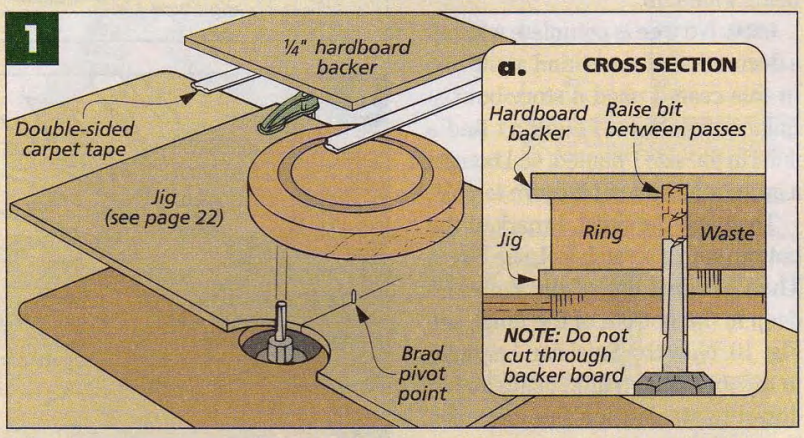

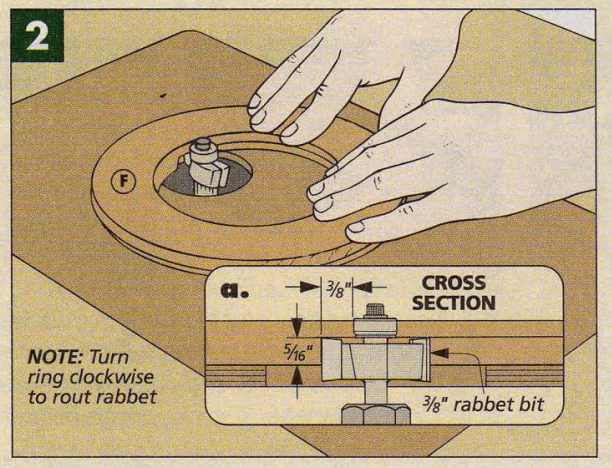

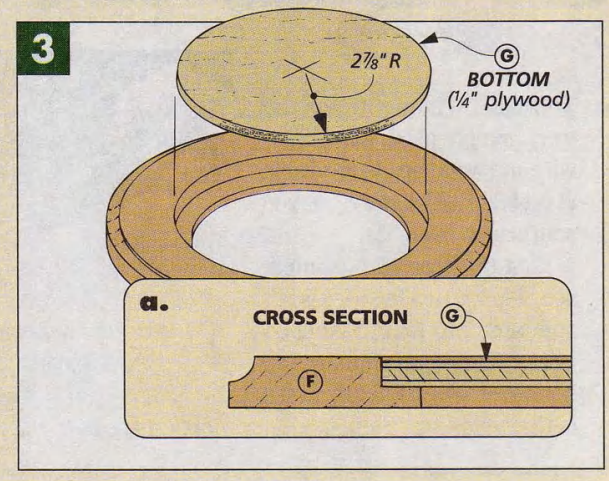

Then I routed a 1/2" roundover with a shoulder on the edge of the middle ring, see detail 'a' on opposite page. Finally, a 1/4" cove is routed on the underside of the bottom ring, see detail 'b' on opposite page.

BOTTOM. There's one other detail to take care of before gluing up the rings. A rabbet has to be routed on the bottom ring to receive a 1/4"-thick plywood bottom. I did this on a router table, using a rabbet bit, see Figs. 2 and 2a. Shop Note: The rabbet is cut slightly deeper than the thickness of the bottom so that the base will rest flat on the bottom ring instead of the plywood bottom, see Fig. 3a.

After cutting the rabbet I cut the 1/4"-thick plywood **bottom (G)** to fit in the recessed opening, see Figs. 3 and 3a. To do this, I used the same method as for making the rings.

ASSEMBLY. Keeping the rings aligned while gluing them up can be a bit tricky. To make things easier, I assembled the base in stages, starting with the bottom and middle rings. Next, I added the top ring, and then finally the bottom. Shop Note: For a better appearance, assemble the rings so the grain runs in one direction.

MUSIC BOX MOVEMENT. The movement I used for this centerpiece comes with a plastic turntable, see Fig. 4a. The tree is attached to the turntable so the movement is wound by turning the tree. Then as the music plays, the whole tree revolves slowly.

Attaching the turntable to the bottom of the tree is easy. It's just a matter of applying a bead of silicone sealant to the bottom of the platform and centering the turntable on the platform, see Fig. 4.

Positioning and gluing the movement to the bottom of the base is a little more involved. If it isn't positioned correctly when it's glued down to the base, the tree and the base won't align while the tree is turning.

To solve this problem, I threaded the music box onto the turntable before gluing it down to the base, see Fig. 5. Then I added a thick layer of silicone to the bottom of the movement and glued it down to the bottom of the base, making sure to center the tree over the base.

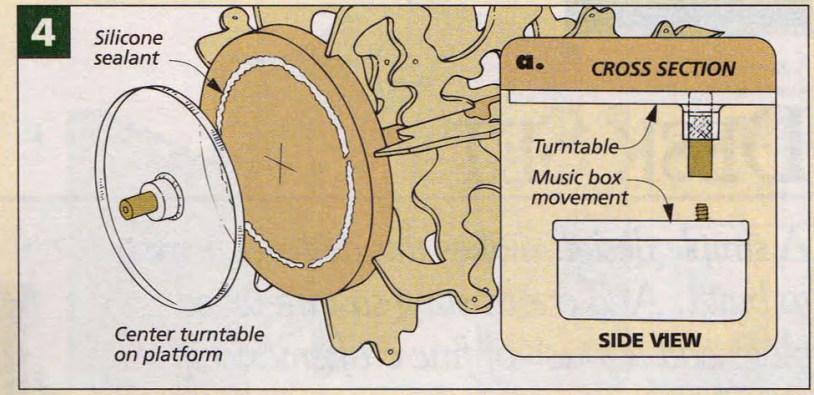

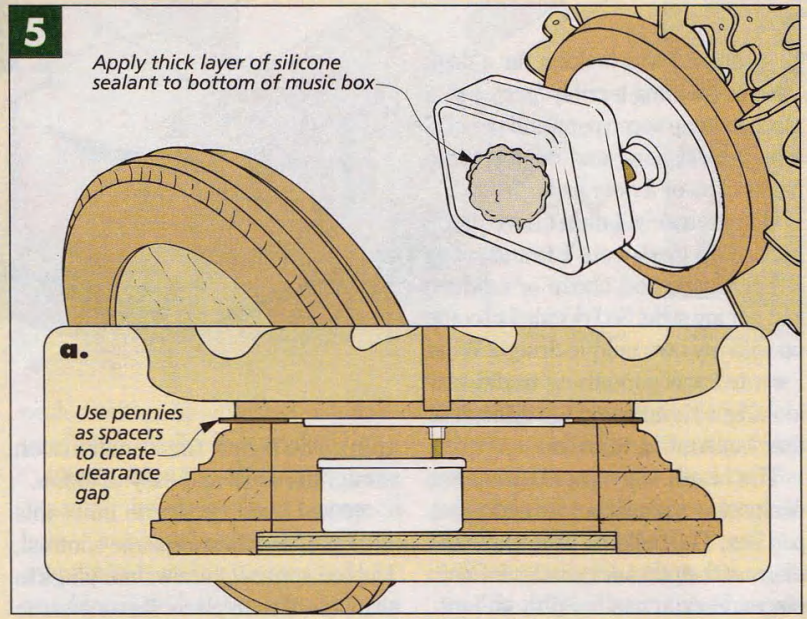

And to create a clearance gap so the tree wouldn't rub on the top of the base while it was turning (as well as to make sure the tree was sitting level), I slipped a few pennies between the platform and the top ring of the base while the glue set up, see Fig. 5a. W

MATERIALS

A	Branch Blank (4)	1/8 ply. - 5 7/8 x 13 5/8
B	Trunk (1)	3/8 x 12 dowel
C	Platform (1)	1/2 x 6 dia.
D	Base/Top Ring (1)	3/4 x 7 1/4 dia.
E	Middle Ring (1)*	3/4 x 8 1/2 dia.
F	Bottom Ring (1)*	1/2 x 8 3/4 dia.
G	Bottom (1)*	1/4 ply.-5 3/4 dia.

*Required only for optional base

SUPPLIES

- (1) 1/8" x 1" Hardwood Dowel
- (1) 2 7/8" x 11/16"-dia. Finial
- (4) 3/4"-dia. Felt Discs
- (40) 1/2"-dia. Round Wood Beads
- 8' of 20 gauge Brass Wire
- (1) Musical Movement w/Turntable

CUTTING DIAGRAM

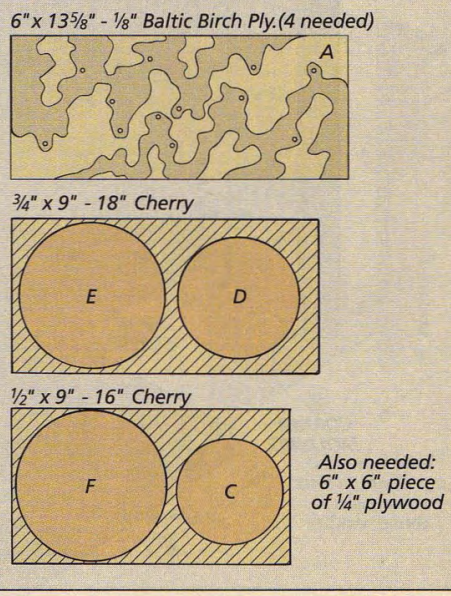

Also needed: 6" x 6" piece of 1/4" plywood

DESK SET

A simple design makes this desk set a snap to build. And contrasting square wood plugs add a touch of fine craftsmanship.

Recently, I was looking for a desk set. Nothing terribly fancy. Just a place to keep some pens and pencils, a pair of scissors, and maybe some paper clips or a note pad.

Unfortunately, I didn't have much luck. The desk sets I found were either plastic and cheap or modern and not my style. So I decided to come up with my own unique design. What I wanted was something traditional-looking without being too difficult or time-consuming to build.

The result is a simple, two-piece desk set — a pencil holder and a note pad box. The building procedure and many of the parts are similar for both pieces. So you can build them both, or build just one. But either way, I think you'll find the construction straightforward and easy to follow.

WOOD. I used cherry to build this desk set. And then for some contrast, I added some square walnut plugs to the caps of each piece. But one of the nice things about a small project like this desk set is that it gives you a chance to experiment.

You could try different combinations of woods (like maple with ebony plugs). Or maybe dig out that piece of figured mahogany you've been squirreling away.

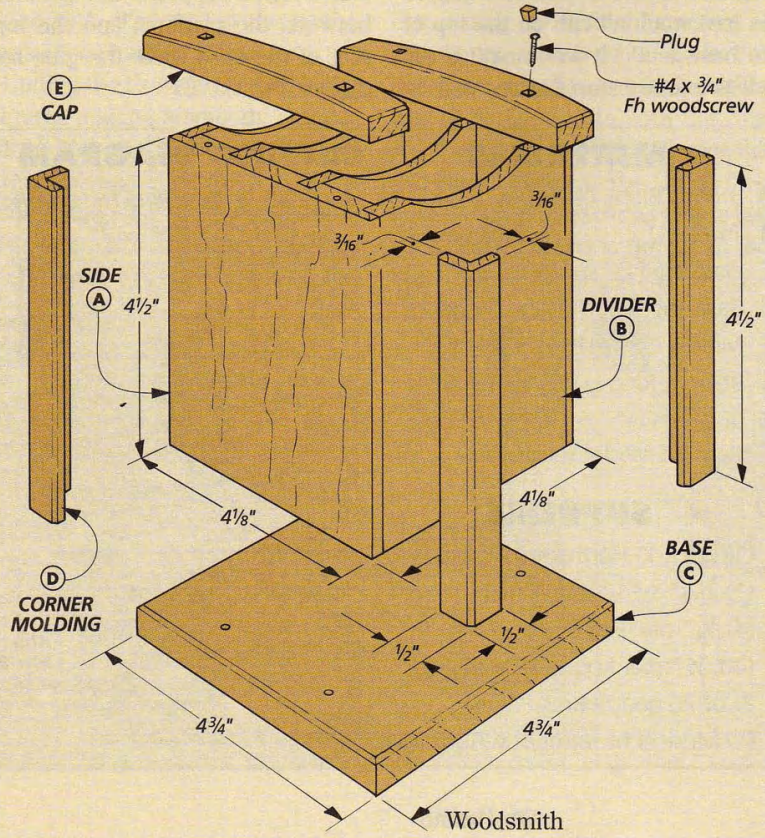

Pencil Holder

At first glance, this pencil holder looks like a square box with a couple dividers. But really, it's two sides with four thin dividers — the front and back are exactly the same as the dividers. This makes the construction quick and easy.

I cut the two **sides (A)** to size first from 1/2"-thick stock, see drawing at left. To hold the dividers, I cut 1/4"-wide rabbets and grooves on the inside face of each side piece, see detail 'a' on opposite page. Shop Note: I did this on a table saw using a dado blade, but you could also use a router table and a 1/4" straight bit.

DIVIDERS. As I mentioned above, the nice thing about the dividers is that all four pieces are identical. Each one is nothing more than a piece of 1/4"-thick stock with an arc cut along the top edge, see drawing on next page.

To lay out the arcs, I used a com-

pass. But to determine the centerpoint of each arc, you'll need a scrap piece. Start by drawing centerlines on each divider as well as the scrap piece. Then with the scrap butted against the divider so the centerlines match up, draw the arc, see detail 'b'.

With the arcs laid out, the waste can be cut out on a band saw or scroll saw, and the curve sanded smooth. Shop Note: To do this quickly and make sure all the arcs ended up the same, I taped the dividers together with carpet tape and cut and sanded the arcs all at the same time.

ASSEMBLY. At this point, the sides and dividers can be glued together. The important thing is to make sure the bottom edges of all the pieces are flush so they will sit flat. So make sure you set the assembly on a flat surface (like a table saw) while gluing and clamping it together.

BASE. While the glue was drying, I made a base for the pencil holder, see drawing at left. This is simply a square piece of 1/2"-thick stock cut slightly larger than the assembled box. (I made mine 4 3/4" square.)

Before attaching the **base (C)**, I routed a 1/16" chamfer on the top edges. Then I drilled four counterbores and shank holes and screwed the base to the sides (A), see detail 'c'.

Shop Note: The screwheads and counterbores in the base will be concealed with self-adhesive felt "buttons" after the finish is applied.

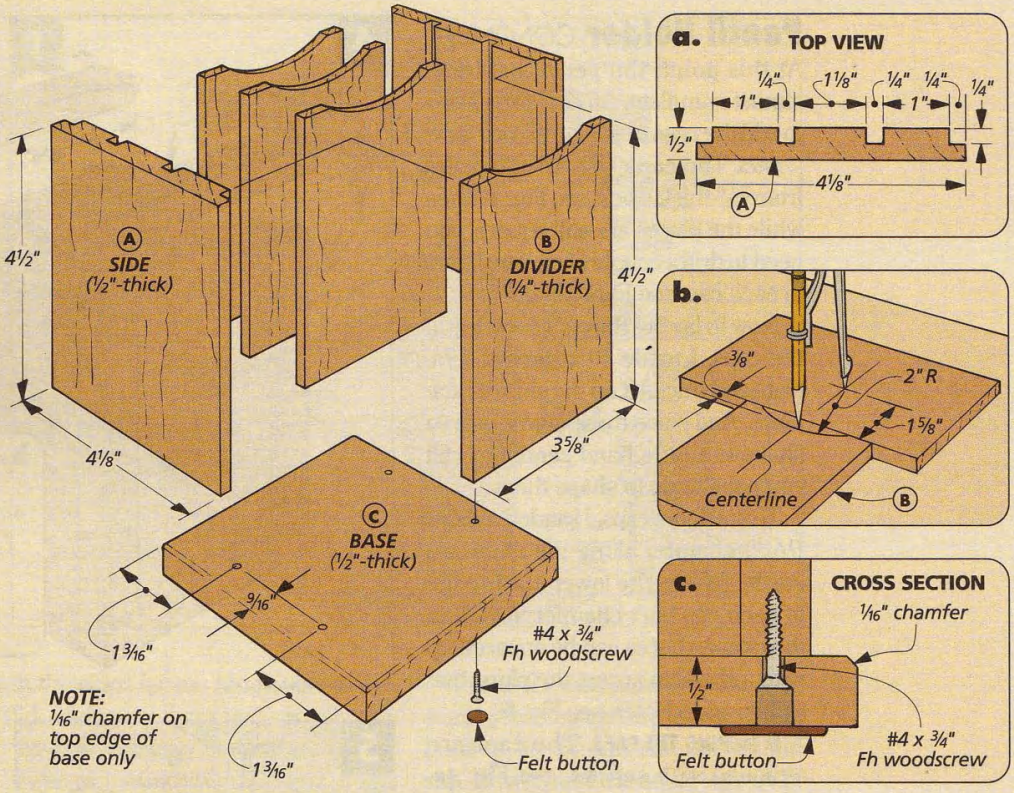

CORNER MOLDING. With the base attached, the basic box of the pencil holder is complete. Next, I turned my attention to covering the exposed joinery. First, I added some molding to the corners of the box. Later, I added a pair of caps to the top of the box.

The **corner molding (D)** starts off as a wide 1/2"-thick blank. To make the molding, I simply cut a 5/16" x 5/16" rabbet on one edge of the blank with a dado blade, see Figs. 1 and 1a. Then I ripped the molding free from the blank, see Figs. 2 and 2a.

After routing 1/16" chamfers on the outside edges, I cut the pieces to length and glued them in place, see Figs. 3 and 3a. And to hold the corner moldings in position, I used a few rubber bands as "clamps."

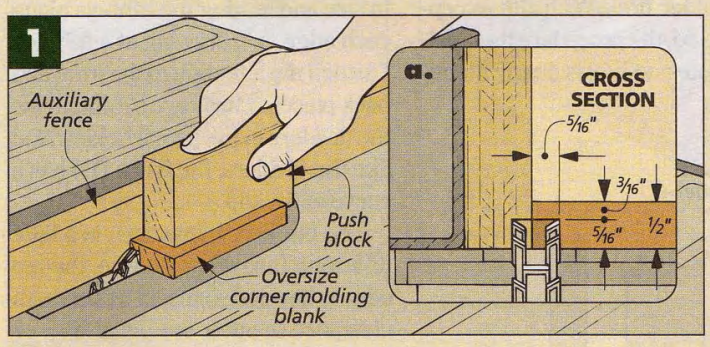

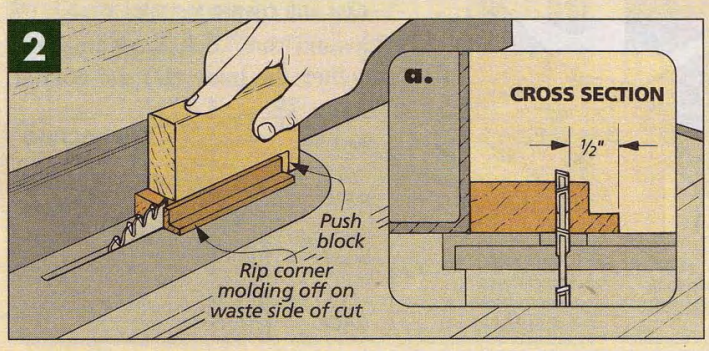

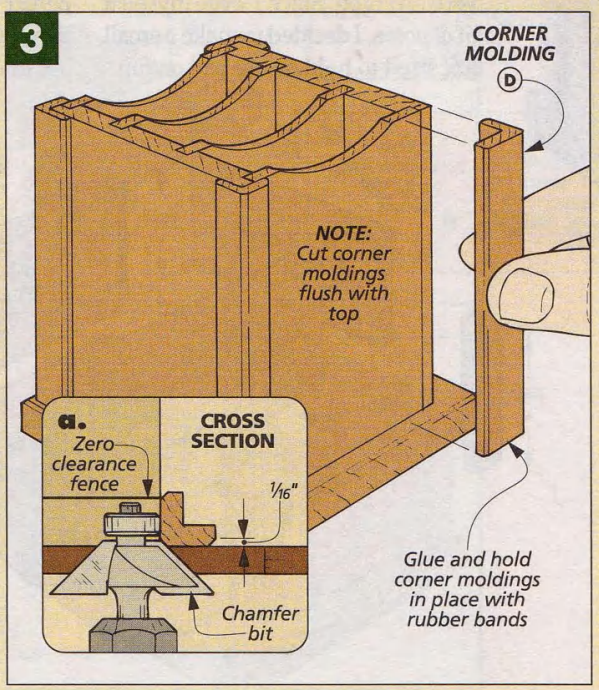

Pencil Holder CONTINUED

At this point, the pencil holder is almost complete. All that remains is to add the caps to the top of each side.

CAPS. The **caps (E)** are cut to size from 3/4"-thick stock, see Fig. 4. Then while the pieces are still square, you need to drill a couple of counterbores in each cap, see Figs. 4b and 5.

Now to lay out the curves on top of the caps, I made a cardboard template and traced it on the side of each piece. And since these curves are so shallow, a little hand sanding is all you need to do to shape them.

To finish the caps, I sanded a slight (1/16") chamfer along the ends and edges. (Note: The lower inside edge of each cap isn't chamfered.) Then the counterbores can be squared up with a chisel to accept the plugs that will be added later, see Fig. 6.

ATTACHING THE CAPS. The caps are attached with screws, see Fig. 4a. Shop Note: I angled each screw slightly as I drove them in to avoid splitting through the side.

Finally, I added some square plugs to fill the counterbores and conceal the screws. (I used walnut as an accent.) The plugs are simply glued in place and sanded flush.

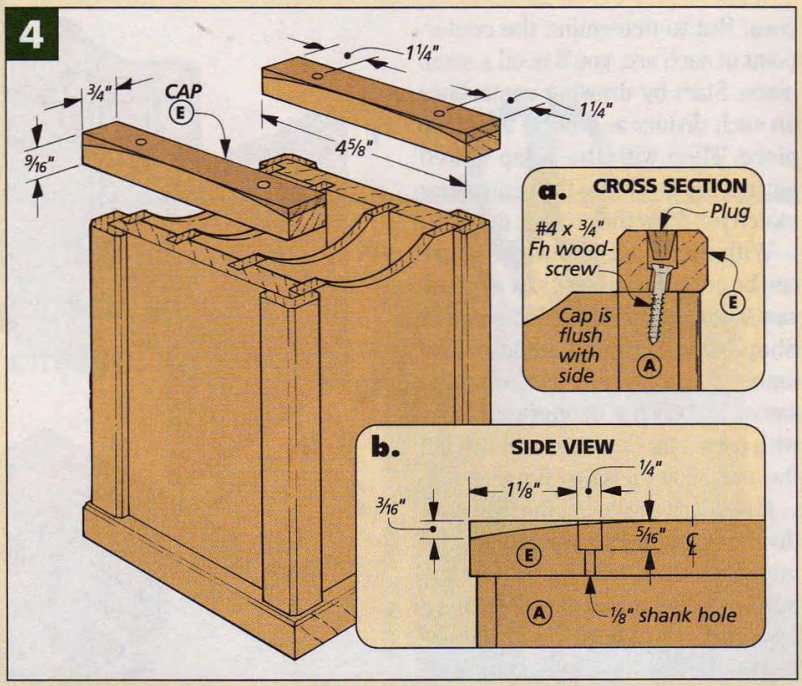

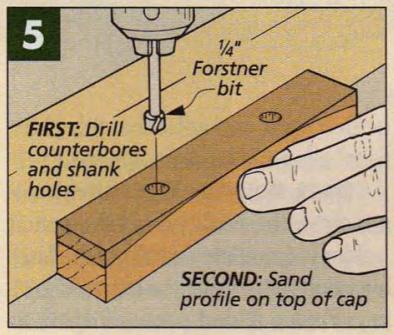

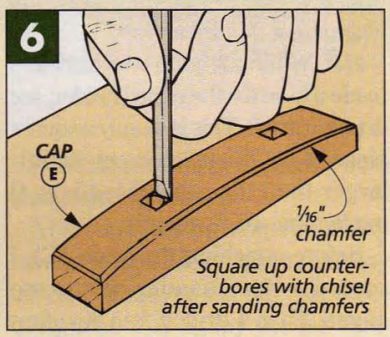

Note Pad Box

It's hard to imagine what we did before those sticky yellow note pads were invented. Since I write myself a lot of notes, I decided to make a small box sized to hold a note pad on top.

Building the note-pad box is pretty simple, especially if you've built the pencil holder first. With the exception of the lid, the procedure for building the note-pad box is nearly identical to the pencil holder.

I started by cutting the **sides (A)** to size and cutting the rabbets along each edge, see drawing at left. Then I turned my attention to the front and back pieces. These are 1/4"-thick like the dividers in the pencil holder. And like the dividers, the **front (B)** has a curve at the top.

The **back (C)**, however, is a little different. Instead of a curve, the top edge is beveled so the lid has enough clearance to open, see detail 'a'.

BASE AND CORNER MOLDING. Once the sides and front/back pieces are glued together, the **base (D)** and **corner**

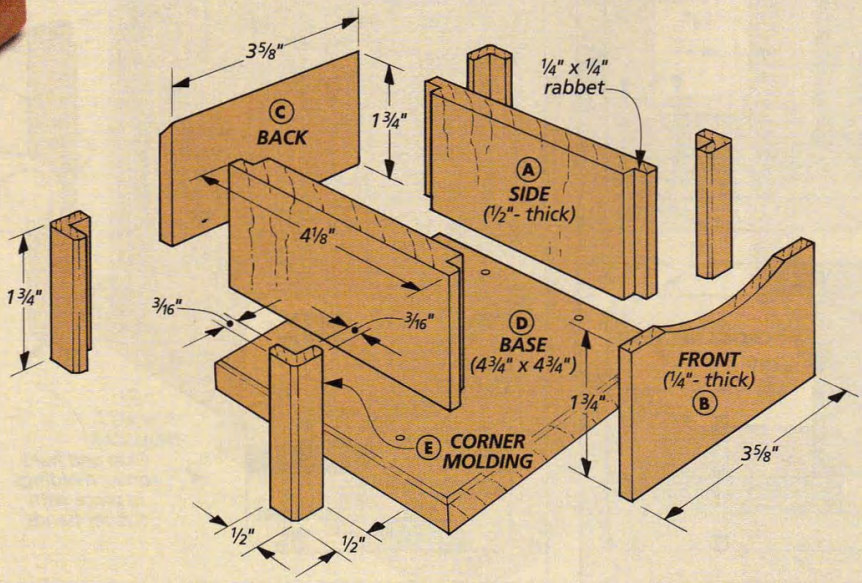

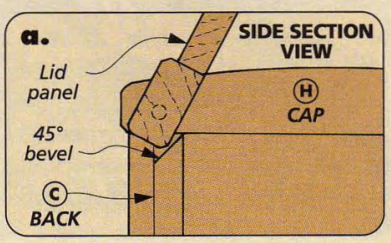

molding (E) can be added. These pieces are identical to those on the pencil box, except the corner molding pieces are shorter, see drawing.

LID & CAPS. Unlike the pencil holder, the note pad box has a lid, see Fig. 1. This lid is actually made up of three separate pieces: a front, back, and a lid panel. The **lid front** and **back (F)** start off as identically-sized pieces of 3/8"-thick stock, see Fig. 3. But after chamfering the top edges of both pieces, a hollow depression is sanded on top of the lid front, see Fig. 2.

After cutting the **lid panel (G)** to size from 1/4"-thick stock, the lid pieces can be glued together, see Fig. 3. Now to complete the lid, all that's left is to add the hinge pins. These are nothing more than a couple of brass screws with their heads cut off.

I simply drilled pilot holes in the ends of the lid back and drove the screws in all the way up to the unthreaded portion of the shank, see Figs. 3a and 3b. Then I cut off the heads of the screws with a hack saw and filed the ends smooth.

The lid is held in place between the two **caps (H)**. (These are identical to those of the pencil holder.) After making the caps, I drilled 5/32"-dia. holes in the sides for the hinge pins of the lid. Laying out these holes is a simple process if you use a fence to align all three pieces, see Fig. 4.

But because the lid and caps aren't flush in back, I placed a 1/16" spacer between the fence and the back of the lid. Then simply squeeze the three pieces together so the hinge pins create a slight indentation on the caps. This way, you'll know exactly where to drill the holes for the pins.

To add the lid assembly to the box, start by adding one of the caps. Then position the lid and add the second cap. Finally, add the square plugs to fill the screw holes and sand the plugs flush with the surface of the caps.

FINISH. I finished both pieces of the desk set by wiping on a few coats of General Finishes' Royal Finish (Satin). Then I added some adhesive felt discs to the bottom of each piece to protect my desk from scratches. W

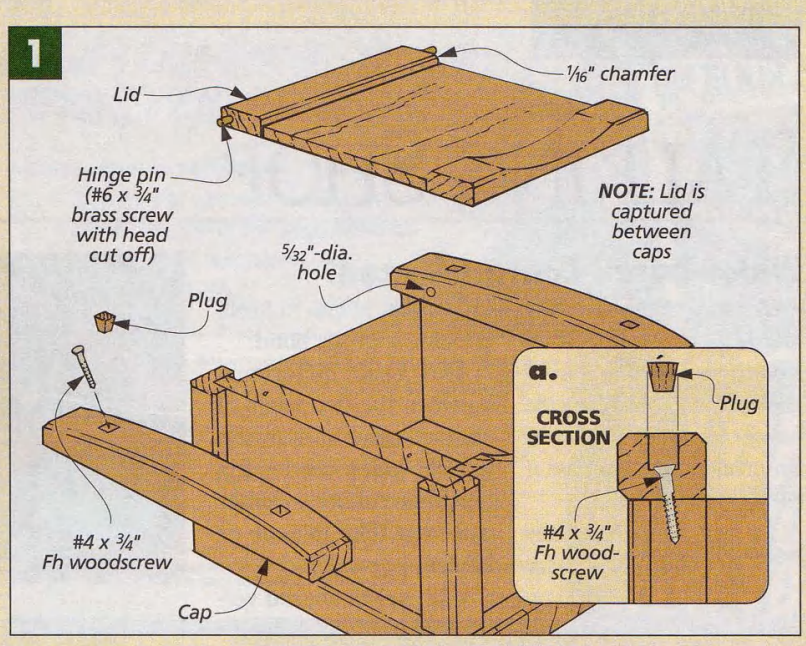

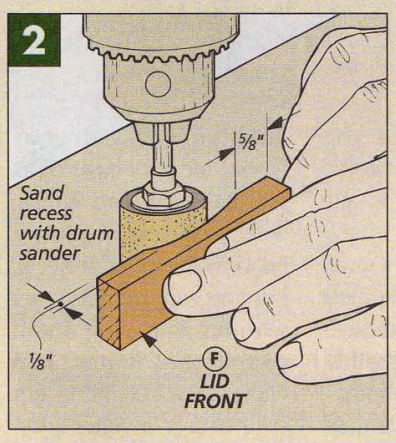

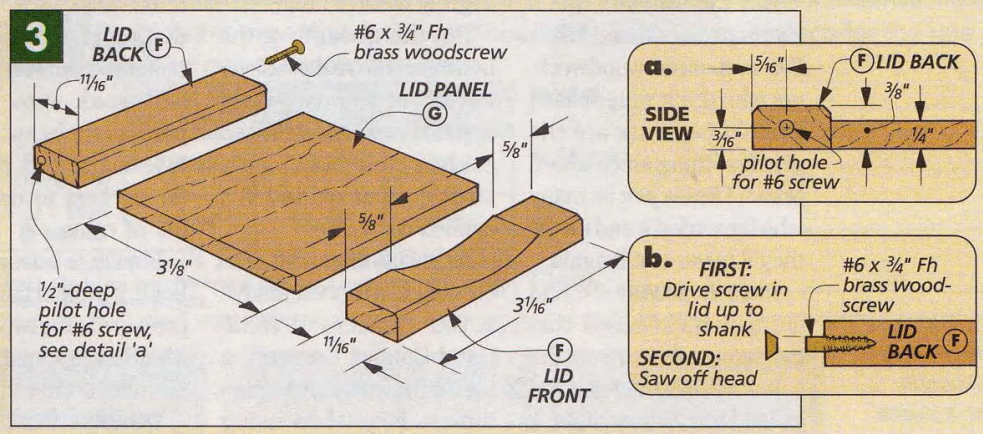

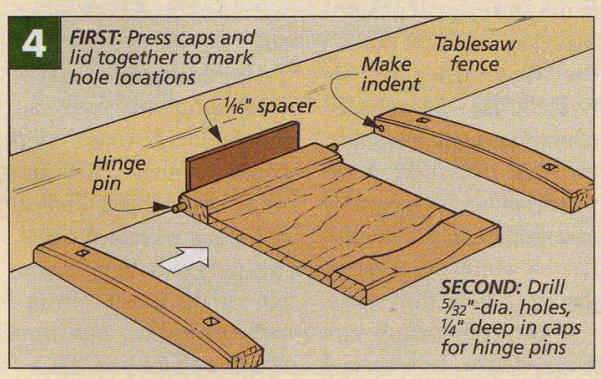

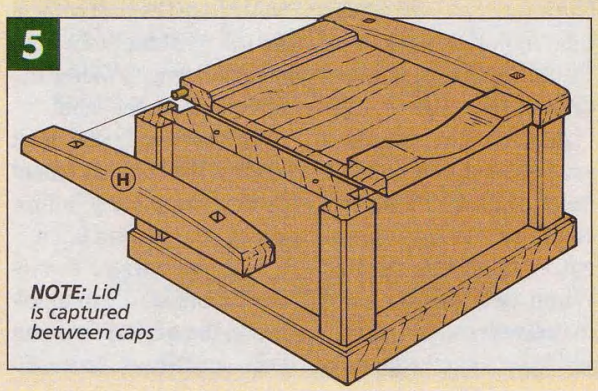

TALKING SHOP

Water-based Contact Cement

Q: A friend of mine recently told me about water-based contact cement. I was wondering how it differs from the contact cement I've been using all along. And does it really work?

Frank Headley
Elmer, New Jersey

In the past few years, the laws have gotten tougher on contact cements containing chemicals that are harmful to the ozone.

As a result, water-based contact cements are growing in use, since they contain far lower concentrations of volatile organic compounds (VOCs). In addition, they're nonflammable and don't give off as many nasty fumes.

But this doesn't mean everyone likes them. While I've met some woodworkers who think water-based contact cements are the greatest thing since sliced bread, I know just as many who have tried it and swear they'll never use it again.

WATER VS. SOLVENT. To find out how water-based contact cement differs from the solvent-based versions, I called Dale Zimmerman, a chemist at Franklin International (makers of Titebond Water-based Contact Cement).

According to Dale, most water-based and solvent-based contact cements contain the same key ingredient — neoprene rubber. When two surfaces are coated with contact cement and then joined together, the rubber sticks to itself, creating a strong bond.

The real difference between the two types of contact cement is in the vehicle which carries the neoprene rubber — either a solvent (like toluene or heptane) or water.

With solvent-based versions, the rubber particles are freely suspended throughout the cement. So when the two surfaces are joined, the rubber particles "crosslink" to form a tight, interlocking bond.

On the other hand, getting the rubber particles to stay suspended in a water solution is more difficult. As a result, there isn't the same amount of crosslinking, so you wind up with a slightly weaker bond.

But the strength of the bond isn't the real problem. For most woodworking applications, water-based contact cement is plenty strong — provided it's applied correctly.

FOLLOWING DIRECTIONS. According to a representative at DAP (makers of Weldwood Contact Cement), a lot of the problems customers face when using water-based contact cement for the first time stem from simply failing to follow the directions on the label.

To start with, you need to allow the contact cement to dry completely before joining the two surfaces.

But since water evaporates more slowly than solvents, the drying time can take anywhere from 30 minutes to well over an hour, depending on temperature and humidity.

▲ *Soap and water clean-up is one of the benefits of using a water-based contact cement.*

Another point to be aware of is that water-based contact cement will soak into porous surfaces like particleboard and plywood. So it's best to use a couple of coats.

Finally, to ensure a good bond, it's important to apply pressure to the two surfaces after they're joined. For this, a J-roller comes in handy.

RECOMMENDATIONS. Okay, so is the stuff worth using? I have to admit that here in the *Woodsmith* shop, we typically use solvent-based contact cement. It's quicker and provides good results under a wide range of conditions. But we also have a ventilation system that can handle the vapors.

If you're working in a home shop, however, I think the safety and convenience of water-based contact cement is hard to beat.

Not only is it strong enough for most projects, but you can use it indoors without worrying about dangerous fumes and vapors. And cleaning out your brush or roller afterwards is a breeze. (Just use soap and warm water.)

One final word of advice. Don't be in a hurry to pass judgment on water-based contact cement. Just like water-based finishes, not all of them are created equal. You may have to try a couple of different brands before finding one that works well for you. W

SOURCES

Woodsmith Project Supplies offers hardware kits and supplies for some of the projects shown in this issue. Similar supplies for these projects are also available at your local hardware store or through the mail order sources at right.

HOLIDAY CENTERPIECE

To build the holiday centerpiece featured on page 24, you'll need quite a few odds and ends.

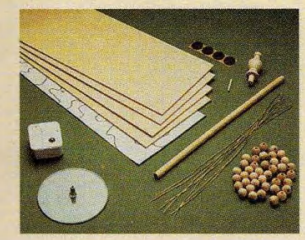

To make things a bit easier, we decided to put together a kit that includes most of the supplies. The only thing we left out was the material needed to make the platform and base. And if you want to add the musical movement (shown at bottom left in the photo), it can be ordered separately, see below.

Currently, *Woodsmith Project Supplies* is offering a supply kit for the holiday centerpiece. This kit includes the following:

(40) 1/2" Birch Beads
(1) 2 7/8"-tall Birch Finial
(8) 20-gauge Brass Wire (12"-long pieces)
(4) 3/4" Felt Discs
(1) 3/8" x 12" Dowel
(4) 1/8"-thick Baltic Birch Plywood (6" x 14 3/4")
(1) Full-size Pattern

Holiday Centerpiece Kit
7114-200 ..... $9.95

Note: Most of these items are available at craft or hobby stores. But if you can't find a source for the wood finial and Baltic birch plywood, see the sources at right.

MUSICAL MOVEMENT. If you would like your centerpiece to rotate and play music, then you can build the optional base and add a musical movement (and a turntable). These single-melody movements are commonly available, and you can choose from a wide variety of songs, see the catalogs listed at right.

Currently, *Woodsmith Project Supplies* is offering a supplemental kit that includes the movement and 4"-dia. turntable needed to turn the centerpiece. (To order the hardware, see left.) The holiday song we chose for this movement was "White Christmas."

Musical Movement Kit
7114-225 ..... $6.95

BALTIC BIRCH PLYWOOD. To make the branches of the centerpiece, we used a special 1/8"-thick plywood called Baltic (or Finnish) birch. What's nice about this plywood is that you won't find voids or knots in the plies. So the edges look cleaner than normal plywood that has voids and seams.

Of course, these plywoods are a bit more expensive and a bit harder to find. If you can't find it at local woodworking or hobby stores, you can order it through the sources listed at right.

BUFFET SERVER

A complete hardware kit for the buffet server that's featured on page 6 is currently available from *Woodsmith Project Supplies*. This kit includes the following items:

(2 pr.) No. 101 (1 11/16") Soss Hinges
(2 pr.) 13/16" No-mortise, Partial-wrap Hinges
(4) Shelf Supports
(2) 1" Knobs w/Backplates
(2) Brass Drawer Pulls
(4) Double Ball Catches
(2) #8 x 2" Fh Screws
(10) #8 x 1 1/2" Fh Screws
(22) #8 x 1 1/4" Fh Screws
(13) #8 x 1" Fh Screws
(6) #8 x 3/4" Fh Screws

Buffet Server Hardware
7114-100 ..... $105.95

MAIL ORDER SOURCES

Similar project supplies and hardware may be ordered from the following companies:

Cherry Tree
800-848-4363
Musical movement & turntable, Centerpiece finial

Constantine's
800-223-8087
Centerpiece finial, Baltic birch plywood

Lee Valley
800-871-8158
Centerpiece finial, Baltic birch plywood

Precision Movements
800-533-2024
Musical movements & turntable

Woodsmith Store
800-835-5084
Buffet server hardware, Holiday centerpiece kit, Musical movement kit, Baltic birch plywood

Woodworker's Hardware
800-383-0130
Buffet server hardware

Woodworkers' Store
800-279-4441
Buffet server hardware, Centerpiece finial

Woodworker's Supply
800-645-9292
Buffet server hardware, Centerpiece finial

WOODSMITH PROJECT SUPPLIES

If you would like to order project supplies or books from *Woodsmith Project Supplies*, please use our Toll Free order line, see below. It's open Monday through Friday, from 8 AM to 5 PM Central Time.

Before calling, please have your VISA, MasterCard, or Discover Card ready.

If you would like to mail in your order, call the number below for more information concerning shipping charges as well as any applicable sales tax.

1-800-444-7527

Note: Prices subject to change after January 1998

WoodNet™ NOW ON THE WEB!

- Over 70 Woodworking Tips Online
- Project Plans You Can Download
- Forums for Woodworking, Tools, & Classifieds
- Catalog of Project Kits, Tools, & Jigs
- Power Tool Reviews
- Links to Other Woodworking Sites
- *Woodsmith/ShopNotes* Back Issue Index

Point your browser to:

http://www.augusthome.com

Select "Woodworking" from the Welcome Page menu.

FINAL DETAILS

▲ **Desk Set.** *Our two-piece set has some unique features: square pegs, curved caps, and a lift-up lid sized to hold a note pad, see page 30.*

▲ **Buffet Server.** *This elegant cherry project features a fold-out top, bead molding, and brass hardware. For instructions, see page 6.*

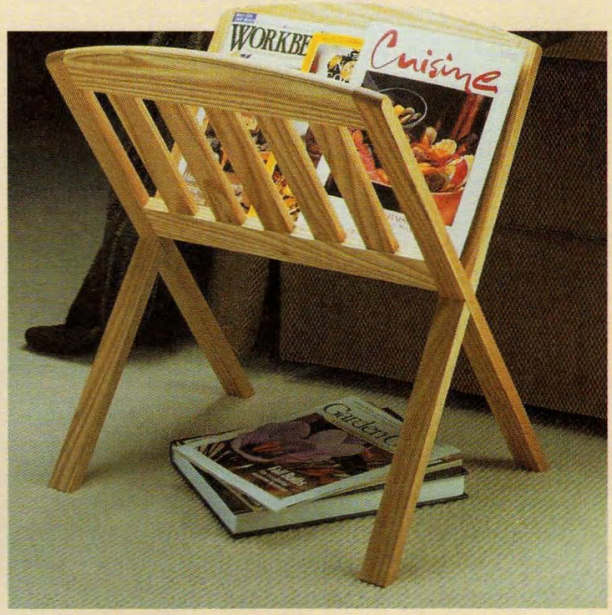

▲ **Magazine Rack.** *Made with two identical frames, this quick and easy project will keep your magazines and catalogs within easy reach. Plans begin on page 18.*

▲ **Holiday Centerpiece.** *Just in time for the holidays, this project won't take long to build, and it's sure to be a favorite for years to come. Detailed instructions begin on page 24.*